WA AFL

Connector ... AFL, steel

Properties

Application	Connection fitting for metal hoses
Connection 1	metric nut thread
Sealing form 1	24° outer cone
Standard	matching connector adapter according to DIN 2353 / DIN EN ISO 8434-1
Short code	DKL
Construction	straight
Series	light
Material	Steel (weldable)



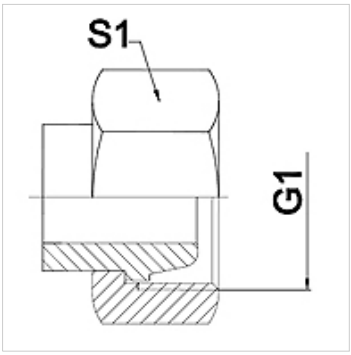

Note

Width across flats values are listed for reference purposes!

Ordering information

Other designs available on request

Item

Identification	DN	PN (bar)	G1	Series	S1 (mm)
WA 004 AFL	4	250	M 12 x 1.5	6 L	17,0
WA 006 AFL	6	250	M 14 x 1.5	8 L	19,0
WA 008 AFL	8	250	M 16 x 1.5	10 L	22,0
WA 010 AFL	10	250	M 18 x 1.5	12 L	22,0
WA 013 AFL	13	250	M 22 x 1.5	15 L	27,0
WA 016 AFL	16	160	M 26 x 1.5	18 L	32,0
WA 020 AFL	20	160	M 30 x 2	22 L	36,0
WA 025 AFL	25	100	M 36 x 2	28 L	41,0
WA 032 AFL	32	100	M 45 x 2	35 L	50,0
WA 040 AFL	40	100	M 52 x 2	42 L	60,0

Product versions

WA AFL VA	Connector ... AFL, VA, Stainless steel

Despite careful checking, we cannot guarantee the accuracy of all information included on this site, and we accept no liability.