# WA HN VA

Connector ... HN, VA

## Properties

| | |
|---|---|
| **Application** | Connection fitting for metal hoses |
| **Connection 1** | imperial outer thread, conical |
| **Sealing form 1** | thread seal |
| **Standard** | DIN EN 10226 / ISO 7-1 |
| **Construction** | straight |
| **Material** | Stainless steel |



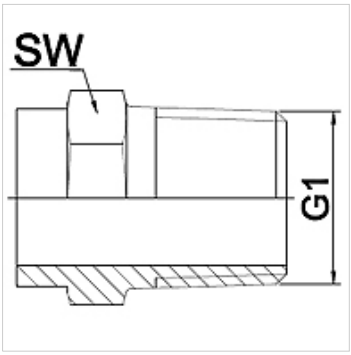


## Note

Width across flats values are listed for reference purposes!

## Ordering information

Other designs available on request

## Item

| Identification | DN | PN (bar) | G1 | AF (mm) |
|---|---|---|---|---|
| **WA 006 HN VA** | 6 | 50 | R 1/4" | 19 |
| **WA 010 HN VA** | 10 | 50 | R 3/8" | 22 |
| **WA 013 HN VA** | 13 | 50 | R 1/2" | 28 |
| **WA 020 HN VA** | 20 | 50 | R 3/4" | 32 |
| **WA 025 HN VA** | 25 | 50 | R 1" | 42 |
| **WA 032 HN VA** | 32 | 40 | R 1.1/4" | 50 |
| **WA 040 HN VA** | 40 | 40 | R 1.1/2" | 55 |
| **WA 050 HN VA** | 50 | 25 | R 2" | 70 |
| **WA 065 HN VA** | 65 | 25 | R 2.1/2" | 85 |
| **WA 080 HN VA** | 80 | 25 | R 3" | 100 |
| **WA 100 HN VA** | 100 | 25 | R 4" | 130 |

## Product versions

| | |
|---|---|
| **WA HN** | Connector ... HN, malleable cast iron, Malleable cast iron |

*Despite careful checking, we cannot guarantee the accuracy of all information included on this site, and we accept no liability.*