HK 0P ABBA

Gear pump, size 0 ABBA

Properties

Thread pressure side	G 1/4"
Thread suction side	G 1/4"
Material	Housing: Aluminium Front flange, end cover: Aluminium



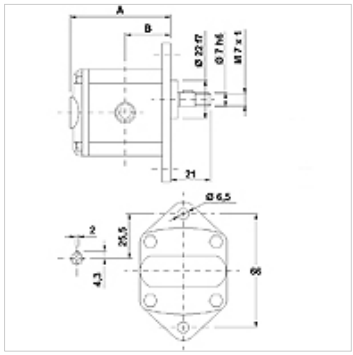

Description

European standard pump – hole pattern 66 – 22 dia. – cylinder dia. 7 – threaded fitting

Ordering information

Further pump versions available on request

Item

Identification	VFU (ccm) (cc)	p1 max. (bar)	p2 max. (bar)	p3 max. (bar)	A (mm)	B (mm)	Direction of rotation	Speed min. (rpm)	Speed max. (rpm)	Weight (kg)
HK 0P 01 01 ABBA	0,16	220	240	260	56,0	26,2	anti-clockwise rotating	700	9000	0,40
HK 0P 01 02 ABBA	0,16	220	240	260	56,0	26,2	clockwise rotating	700	9000	0,40
HK 0P 02 01 ABBA	0,24	220	240	260	56,5	26,5	anti-clockwise rotating	700	9000	0,41
HK 0P 02 02 ABBA	0,24	220	240	260	56,5	26,5	clockwise rotating	700	9000	0,41
HK 0P 04 01 ABBA	0,45	220	240	260	58,0	27,3	anti-clockwise rotating	700	9000	0,42
HK 0P 04 02 ABBA	0,45	220	240	260	58,0	27,3	clockwise rotating	700	9000	0,42
HK 0P 05 01 ABBA	0,56	220	240	260	59,0	27,8	anti-clockwise rotating	700	9000	0,43
HK 0P 05 02 ABBA	0,56	220	240	260	59,0	27,8	clockwise rotating	700	9000	0,43
HK 0P 06 01 ABBA	0,75	220	240	260	60,5	28,5	anti-clockwise rotating	700	9000	0,44
HK 0P 06 02 ABBA	0,75	220	240	260	60,5	28,5	clockwise rotating	700	9000	0,44
HK 0P 07 01 ABBA	0,92	220	240	260	62,0	29,3	anti-clockwise rotating	700	6000	0,46
HK 0P 07 02 ABBA	0,92	220	240	260	62,0	29,3	clockwise rotating	700	6000	0,46

VFU = conveying volume per revolution – p1 = continuous pressure – p2 = working pressure – p3 = maximum pressure

Additional elements

HK MPK	Selection chart for motor/pump combination for gear pumps

Despite careful checking, we cannot guarantee the accuracy of all information included on this site, and we accept no liability.