HK 1P FBBA

Gear pump, size 1 FBBA

HANSA-FLEX

Properties

Thread pressure side	G 3/8"
Thread suction side	G 3/8"
Material	Housing: Aluminium Front flange, end cover: Aluminium



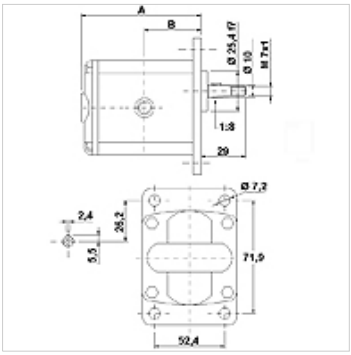

Description

European standard pump – hole pattern 71.9 x 52.4 – dia. 25.4 – taper 1:8 – threaded fitting

Ordering information

Further pump versions available on request

Item

Identification	VFU (ccm) (cc)	p1 max. (bar)	p2 max. (bar)	p3 max. (bar)	A (mm)	B (mm)	Direction of rotation	Speed min. (rpm)	Speed max. (rpm)	Weight (kg)
HK 1P 16 01 FBBA	0,91	240	260	280	77,1	37,3	anti-clockwise rotating	700	6000	0,95
HK 1P 16 02 FBBA	0,91	240	260	280	77,1	37,3	clockwise rotating	700	6000	0,95
HK 1P 17 01 FBBA	1,17	250	270	290	78,0	37,8	anti-clockwise rotating	700	6000	0,97
HK 1P 17 02 FBBA	1,17	250	270	290	78,0	37,8	clockwise rotating	700	6000	0,97
HK 1P 18 01 FBBA	1,56	250	270	290	79,5	38,5	anti-clockwise rotating	700	6000	1,01
HK 1P 18 02 FBBA	1,56	250	270	290	79,5	38,5	clockwise rotating	700	6000	1,01
HK 1P 20 01 FBBA	2,08	250	270	290	81,5	39,5	anti-clockwise rotating	700	6000	1,03
HK 1P 20 02 FBBA	2,08	250	270	290	81,5	39,5	clockwise rotating	700	6000	1,03
HK 1P 21 01 FBBA	2,60	250	270	290	83,5	40,5	anti-clockwise rotating	700	6000	1,06
HK 1P 21 02 FBBA	2,60	250	270	290	83,5	40,5	clockwise rotating	700	6000	1,06
HK 1P 23 01 FBBA	3,12	240	260	290	85,5	41,5	anti-clockwise rotating	700	6000	1,09
HK 1P 23 02 FBBA	3,12	240	260	290	85,5	41,5	clockwise rotating	700	6000	1,09
HK 1P 25 01 FBBA	3,64	240	260	290	87,5	42,5	anti-clockwise rotating	700	6000	1,12
HK 1P 25 02 FBBA	3,64	240	260	290	87,5	42,5	clockwise rotating	700	6000	1,12
HK 1P 27 01 FBBA	4,16	240	260	290	89,5	43,5	anti-clockwise rotating	700	6000	1,17
HK 1P 27 02 FBBA	4,16	240	260	290	89,5	43,5	clockwise rotating	700	6000	1,17
HK 1P 29 01 FBBA	4,94	250	280	300	92,5	45,0	anti-clockwise rotating	700	6000	1,20
HK 1P 29 02 FBBA	4,94	200	260	290	92,5	45,0	clockwise rotating	700	6000	1,20
HK 1P 31 01 FBBA	5,85	200	260	290	96,0	46,8	anti-clockwise rotating	700	5000	1,26
HK 1P 31 02 FBBA	5,85	190	260	290	96,0	46,8	clockwise rotating	700	5000	1,26
HK 1P 32 01 FBBA	6,50	190	260	290	98,5	48,0	anti-clockwise rotating	700	5000	1,30
HK 1P 32 02 FBBA	6,50	190	260	290	98,5	48,0	clockwise rotating	700	5000	1,30
HK 1P 34 01 FBBA	7,54	190	210	260	102,5	50,0	anti-clockwise rotating	700	5000	1,36
HK 1P 34 02 FBBA	7,54	190	210	260	102,5	50,0	clockwise rotating	700	5000	1,36
HK 1P 36 01 FBBA	9,88	170	190	230	111,5	54,5	anti-clockwise rotating	700	4000	1,50
HK 1P 36 02 FBBA	9,88	170	190	230	111,5	54,5	clockwise rotating	700	4000	1,50

VFU = conveying volume per revolution – p1 = continuous pressure – p2 = working pressure – p3 = maximum pressure

Additional elements

HK MPK	Selection chart for motor/pump combination for gear pumps

Despite careful checking, we cannot guarantee the accuracy of all information included on this site, and we accept no liability.