HK 2P ISRA

Gear pump, size 2 ISRA

Properties

Pitch circle pressure side	35 / M6
Pitch circle suction side	40 / M6
Material	Housing: Aluminium Front flange, end cover: Aluminium



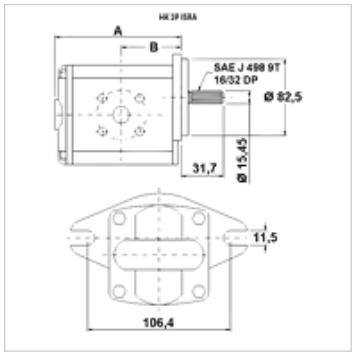

Description

SAE A pump – hole pattern 106.4 – dia. 82.5 – splined shaft SAE J 498 – flange fitting

Ordering information

Further pump versions available on request

Item

Identification	VFU (cc)	p1 max. (bar)	p2 max. (bar)	p3 max. (bar)	A (mm)	B (mm)	Direction of rotation	Speed min. (rpm)	Speed max. (rpm)	Weight (kg)
HK 2P 41 51 ISRA	4,2	260	280	300	88	39,4	anti-clockwise rotating	700	3500	2,28
HK 2P 41 52 ISRA	4,2	260	280	300	88	39,4	clockwise rotating	700	3500	2,28
HK 2P 43 51 ISRA	6,0	260	280	300	91	47,4	anti-clockwise rotating	700	3500	2,38
HK 2P 43 52 ISRA	6,0	260	280	300	91	47,4	clockwise rotating	700	3500	2,38
HK 2P 45 51 ISRA	8,4	260	280	300	95	49,1	anti-clockwise rotating	700	3500	2,48
HK 2P 45 52 ISRA	8,4	260	280	300	95	49,1	clockwise rotating	700	3500	2,48
HK 2P 47 51 ISRA	10,8	260	280	300	99	45,8	anti-clockwise rotating	700	3500	2,58
HK 2P 47 52 ISRA	10,8	260	280	300	99	45,8	clockwise rotating	700	3500	2,58
HK 2P 49 51 ISRA	14,4	250	270	290	105	45,8	anti-clockwise rotating	700	3500	2,78
HK 2P 49 52 ISRA	14,4	250	270	290	105	45,8	clockwise rotating	700	3500	2,78
HK 2P 51 51 ISRA	16,8	230	250	270	109	45,8	anti-clockwise rotating	700	3500	2,88
HK 2P 51 52 ISRA	16,8	230	250	270	109	45,8	clockwise rotating	700	3500	2,88
HK 2P 53 51 ISRA	19,2	210	230	250	113	45,8	anti-clockwise rotating	700	3000	2,98
HK 2P 53 52 ISRA	19,2	210	230	250	113	45,8	clockwise rotating	700	3000	2,98
HK 2P 55 51 ISRA	22,8	200	220	240	119	53,3	anti-clockwise rotating	700	3000	3,13
HK 2P 55 52 ISRA	22,8	200	220	240	119	53,3	clockwise rotating	700	3000	3,13

VFU = conveying volume per revolution – p1 = continuous pressure – p2 = working pressure – p3 = maximum pressure

Accessories

GF LK	Pump connection (4 hole)
GF LK M	Pump connection (4 hole)
W VA W90	Fitting, angle 90°

Despite careful checking, we cannot guarantee the accuracy of all information included on this site, and we accept no liability.