HK ASEP
Vent screws

Properties

Material	Brass Sinter bronze filter
Use	For venting plunger cylinders



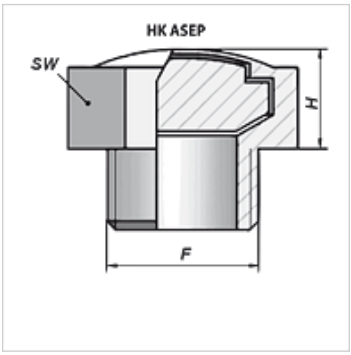

Item

Identification	F	H (mm)	AF (mm)	Weight (kg)
HK ASEP 03 0000	G 1/8”	7,0	13	0,01
HK ASEP 04 0000	G 1/4”	8,0	16	0,01
HK ASEP 06 0000	G 3/8”	9,0	19	0,02
HK ASEP 08 0000	G 1/2”	9,0	24	0,02
HK ASEP 12 0000	G 3/4”	8,0	30	0,04
HK ASEP 16 0000	G 1"	9,0	36	0,06

Despite careful checking, we cannot guarantee the accuracy of all information included on this site, and we accept no liability.