HK CDA

Piston protection nut, self-locking

HANSA-FLEX

Properties

Material	Steel

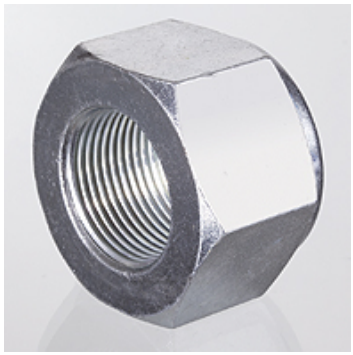

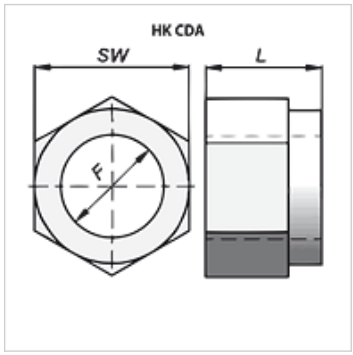

Item

Identification	F	L (mm)	AF (mm)	Weight (kg)
HK CDA 000 1415	M 14x1.5	16	22	0,03
HK CDA 000 2015	M 20x1.5	23	30	0,07
HK CDA 000 2420	M 24x2	27	36	0,13
HK CDA 000 2720	M 27x2	30	41	0,18
HK CDA 000 3320	M 33x2	35	50	0,31
HK CDA 000 3930	M 39x3	42	60	0,56
HK CDA 000 4830	M 48x3	49	75	1,00

Despite careful checking, we cannot guarantee the accuracy of all information included on this site, and we accept no liability.