HK CDB

Piston protection nut, self-locking, flat-headed

Properties

Material	Steel

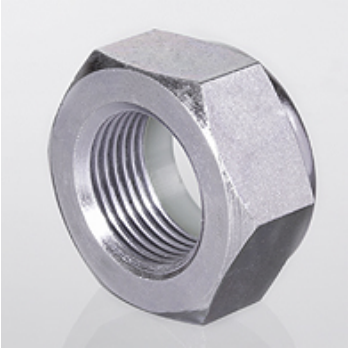

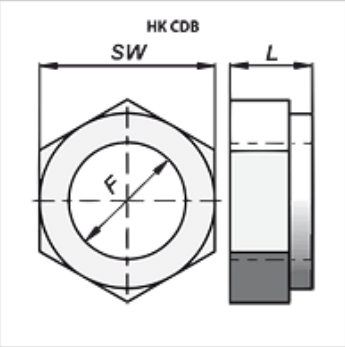

Item

Identification	F	L (mm)	AF (mm)	Weight (kg)
HK CDB 000 2015	M 20x1.5	18	30	0,06
HK CDB 000 2420	M 24x2	21	36	0,10
HK CDB 000 2720	M 27x2	23	41	0,18

Despite careful checking, we cannot guarantee the accuracy of all information included on this site, and we accept no liability.