HK CFE

Cylinder base with oil inlet

Properties

Material	Steel S355J0 (Fe510C)



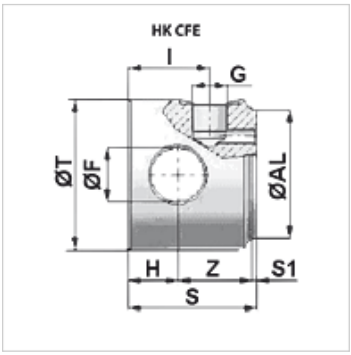

Item

Identification	Ø AL (mm)	Ø F (mm)	Ø T (mm)	G	H (mm)	I (mm)	S (mm)	S1 (mm)	Z (mm)	Weight (kg)
HK CFE 040 050 4	40	16,20	50	G 1/4”	15	30,0	50	2	33	0,60
HK CFE 050 060 6	50	20,25	60	G 3/8”	20	38,0	60	2	38	1,10
HK CFE 060 070 6	60	25,25	70	G 3/8”	23	38,0	60	2	35	1,40
HK CFE 070 080 6	70	25,25	80	G 3/8”	23	38,0	60	2	35	1,95
HK CFE 080 095 8	80	30,25	95	G 1/2”	25	47,0	75	2	48	2,50
HK CFE 100 115 8	100	35,25	115	G 1/2”	30	47,0	75	2	43	4,50

Despite careful checking, we cannot guarantee the accuracy of all information included on this site, and we accept no liability.