HK CFHR
Cylinder base

Properties

Material	Steel S355J0 (Fe510C)
Use	Suitable for cylinder HK HFR

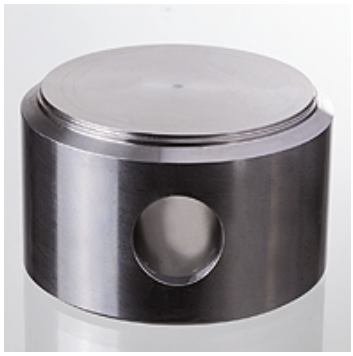

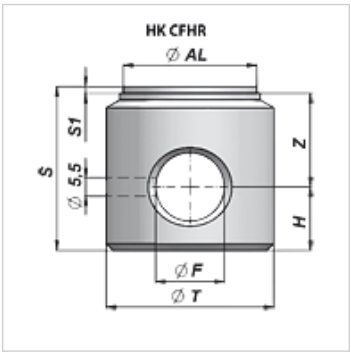

Item

Identification	Ø AL (mm)	Ø F (mm)	Ø T (mm)	H (mm)	S (mm)	S1 (mm)	Z (mm)	Weight (kg)
HK CFHR 035 025	25	12,10	35	12	30	2	16	0,18
HK CFHR 040 032	32	16,00	40	17	40	2	21	0,32
HK CFHR 050 040	40	20,50	50	19	49	2	28	0,60
HK CFHR 060 050	50	25,50	60	25	70	2	43	1,28
HK CFHR 070 060	60	25,50	70	25	52	2	25	1,25
HK CFHR 080 070	70	30,50	80	25	62	2	35	1,94
HK CFHR 090 080	80	30,50	90	25	62	2	35	2,52
HK CFHR 115 100	100	30,50	115	34	70	2	34	4,90

Despite careful checking, we cannot guarantee the accuracy of all information included on this site, and we accept no liability.