HK CFVP

Cylinder base with oil inlet

Properties

Material	Steel S355J0 (Fe510C)



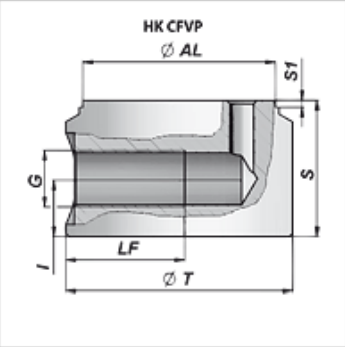

Item

Identification	Ø AL (mm)	Ø T (mm)	G	I (mm)	LF (mm)	S (mm)	S1 (mm)	Weight (kg)
HK CFVP 040 050 04	40	50	G 1/4”	17,0	30	40	2	0,54
HK CFVP 050 060 06	50	60	G 3/8”	17,0	35	40	2	0,77
HK CFVP 060 070 06	60	70	G 3/8”	17,0	35	40	2	1,10
HK CFVP 063 073 06	63	73	G 3/8”	17,0	35	40	2	1,17
HK CFVP 070 080 06	70	80	G 3/8”	17,0	35	40	2	1,41
HK CFVP 080 095 08	80	95	G 1/2”	20,0	45	50	2	2,49
HK CFVP 090 105 08	90	105	G 1/2”	20,0	45	50	2	3,11
HK CFVP 100 115 08	100	115	G 1/2”	20,0	45	50	2	3,70

Despite careful checking, we cannot guarantee the accuracy of all information included on this site, and we accept no liability.