HK CGE
Radial pivot bearings GE

Properties

Standard	DIN 648, E SERIES - ISO 6124/1
Material	Steel



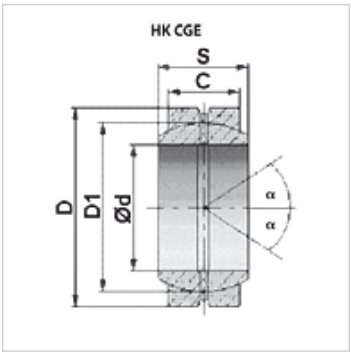

Item

Identification	C (mm)	D (mm)	D1 (mm)	Ø d (mm)	S (mm)	α (°)	Weight (kg)
HK CGE 015 0000	9	26	22,0	15	12	8	0,03
HK CGE 020 0000	12	35	29,0	20	16	9	0,06
HK CGE 025 0000	16	42	35,5	25	20	7	0,11
HK CGE 030 0000	18	47	40,7	30	22	6	0,14
HK CGE 035 0000	20	55	47,0	35	25	6	0,22
HK CGE 040 0000	22	62	53,0	40	28	7	0,30
HK CGE 045 0000	25	68	60,0	45	32	7	0,40
HK CGE 050 0000	28	75	66,0	50	35	6	0,55
HK CGE 060 0000	36	90	80,0	60	44	6	1,00

Despite careful checking, we cannot guarantee the accuracy of all information included on this site, and we accept no liability.