HK CT11

Threaded piston for hydraulic cylinders

Properties

Material	Steel 9SMn28

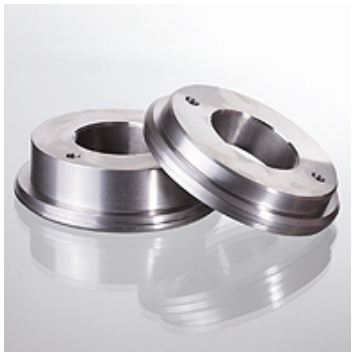

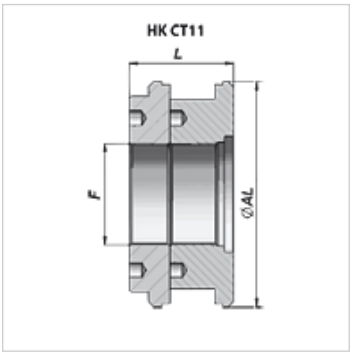

Note

Suitable packing sets can be supplied on request.

Item

Identification	Ø AL (mm)	F	L (mm)	Weight (kg)
HK CT11 180 080	180	M 80x2	82	9,75
HK CT11 200 080	200	M 80x2	82	13,00
HK CT11 250 080	250	M 98x2	82	21,60

Despite careful checking, we cannot guarantee the accuracy of all information included on this site, and we accept no liability.