HK CTB

Short inserted piston for hydraulic cylinders

HANSA-FLEX

Properties

Material	Steel 9SMn28

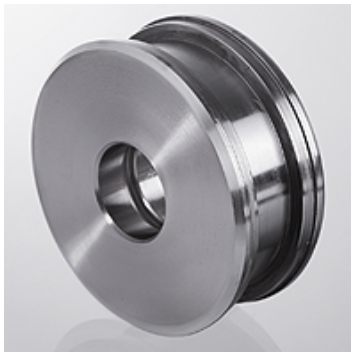

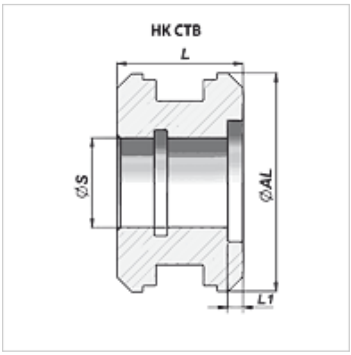

Note

Suitable packing sets can be supplied on request.

Item

Identification	Ø AL (mm)	Ø S (mm)	L (mm)	L1 (mm)	Weight (kg)
HK CTB 0 040 015	40	15	27	3	0,14
HK CTB 0 050 020	50	20	30	3	0,20
HK CTB 0 060 020	60	20	35	5	0,35
HK CTB 0 060 024	60	24	35	5	0,42
HK CTB 0 070 020	70	20	35	5	0,58
HK CTB 0 070 024	70	24	35	5	0,67
HK CTB 0 080 024	80	24	40	5	1,08
HK CTB 0 080 027	80	27	40	5	1,03
HK CTB 0 100 027	100	27	40	5	1,83
HK CTB 0 100 033	100	33	40	5	1,72

Despite careful checking, we cannot guarantee the accuracy of all information included on this site, and we accept no liability.