HK CTPM

Threaded piston for hydraulic cylinders

HANSA-FLEX

Properties

Material Steel C40

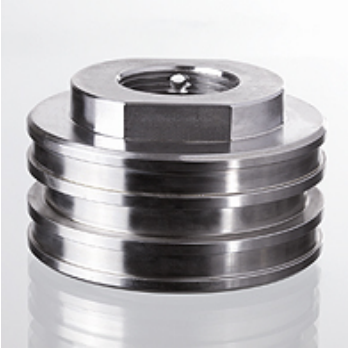

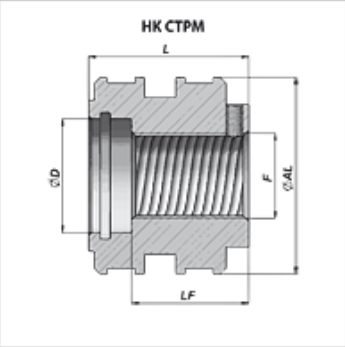

Item

Identification	Ø AL (mm)	Ø D (mm)	F	L (mm)	LF (mm)	Weight (kg)	matching seal kit
HK CTPM 050 021 040	50	21,0	M 20x1.5	40	28	0,4	HK GKG CTPM 050
HK CTPM 050 025 040	50	25,0	M 22x1.5	40	28	0,4	On request
HK CTPM 060 030 045	60	30,0	M 27x2	45	30	0,6	HK GKG CTPM 060
HK CTPM 063 030 045	63	30,0	M 27x2	45	30	0,7	On request
HK CTPM 070 035 056	70	35,0	M 33x2	56	41	1,0	On request
HK CTPM 070 040 056	70	40,0	M 30x2	56	41	1,0	HK GKG CTPM 070
HK CTPM 080 040 056	80	40,0	M 30x2	56	41	1,4	HK GKG CTPM 080
HK CTPM 080 041 056	80	40,0	M 33x2	56	41	1,4	On request
HK CTPM 090 038 055	90	38,0	M 36x3	55	40	1,8	HK GKG CTPM 090
HK CTPM 090 043 055	90	43,0	M 40x2	55	47	1,7	HK GKG CTPM 090
HK CTPM 100 045 056	100	45,0	M 42x2	56	41	2,2	HK GKG CTPM 100
HK CTPM 110 050 070	110	50,0	M 48x3	70	55	3,4	HK GKG CTPM 110
HK CTPM 120 050 070	120	50,0	M 48x3	70	55	4,1	HK GKG CTPM 120
HK CTPM 120 054 070	120	54,0	M 52x2	70	55	3,9	On request
HK CTPM 125 050 070	125	51,0	M 48x3	70	55	4,4	HK GKG CTPM 125
HK CTPM 125 054 070	125	54,0	M 52x2	70	57	4,2	HK GKG CTPM 125
HK CTPM 140 050 075	140	50,0	M 48x3	75	57	6,0	HK GKG CTPM 140
HK CTPM 140 067 075	140	67,0	M 64x3	75	61	5,6	On request
HK CTPM 150 056 080	150	56,0	M 52x3	80	60	7,5	HK GKG CTPM 150
HK CTPM 150 067 080	150	67,0	M 64x3	80	64	6,9	On request
HK CTPM 160 056 080	160	56,0	M 52x3	80	60	8,5	HK GKG CTPM 160
HK CTPM 160 076 080	160	76,0	M 74x3	80	64	7,8	On request
HK CTPM 180 090 115	180	90,0	M 80x2	115	85	14,1	HK GKG CTPM 180
HK CTPM 200 100 115	200	100,0	M 90x2	115	85	17,5	HK GKG CTPM 200
HK CTPM 220 110 120	220	110,0	M 100x2	120	90	21,8	HK GKG CTPM 220
HK CTPM 250 125 130	250	125,0	M 115x3	130	100	30,1	HK GKG CTPM 250
HK CTPM 300 150 140	300	150,0	M 140x3	140	105	44,9	HK GKG CTPM 300

Despite careful checking, we cannot guarantee the accuracy of all information included on this site, and we accept no liability.