HK EPMT

EPMT geroller motor

Properties

Connection	Oil fittings: A + B = G 3/4"; leak oil = G 1/4"
Design	Standard variant Type "C" with standard seal Four hole flange bolt circle 160 Shaft Ø 40mm, length 79mm
Intake and return pressure with leak oil line max.	210 bar

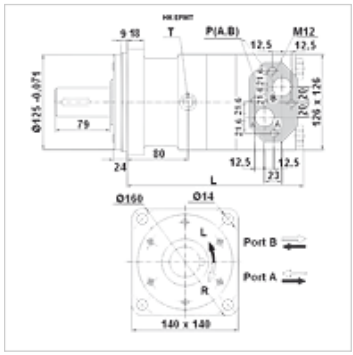

Note

It is generally recommended that the leak oil line is connected!

Item

Identification	Flow rate max. (L/min)	Displace-ment (cc)	Speed min. (rpm)	Speed max. (rpm)	Torque max. (N-m)	Pressure drop max. (bar)	Pmax. at 0-100 rpm (bar)	Pmax. at 100-300 rpm (bar)	Pmax. at 300 rpm (bar)	L (mm)	Weight (kg)
HK EPMT 160 C	100	161,1	10	625	470	200	75	40	20	190	20,0
HK EPMT 200 C	125	201,4	10	625	590	200	75	40	20	195	22,5
HK EPMT 250 C	125	251,8	10	500	730	200	75	40	20	201	21,5
HK EPMT 315 C	125	326,3	10	380	950	200	75	40	20	211	22,0
HK EPMT 400 C	125	410,9	10	305	1080	180	75	40	20	221	23,0
HK EPMT 500 C	125	523,6	10	240	1220	160	75	40	-	235	24,0

max. pressure on shaft seal (without leak oil line) or pressure in leak oil line – Values for torque and pressure drop apply for continuous operation – pmax = max. pressure

Accessories

HK V0 590	Shock valve

Spare parts

HK EP DS	Seal kit for hydraulic planetary motor

Despite careful checking, we cannot guarantee the accuracy of all information included on this site, and we accept no liability.