# HK HM

Standard double-acting cylinders without fastening

HANSA FLEX

## Properties

| | |
|---|---|
| **Design** | without mounting elements |
| **Operating pressure** | max. 200 bar (acc. DIN EN 982) |
| **Test pressure** | max. 240 bar (acc. DIN EN 982) |
| **Temp. range** | Standard version -15 °C to +80 °C |
| **Media** | HLP fluids |
| **Material** | Piston rod: Steel 20MnV6, Chrome 25 µm ±/- 5<br>Piston rod: Resistance for 120 h in the NSS test according to ISO 3768<br>Piston rod guide: Steel 9SMn28<br>Oil filler neck: Steel 9SMn28<br>Polished cylinder barrel: ST 52.3 DIN 2393-ISO H9<br>Cylinder base: FE 510-A105<br>Nut: Steel 8UNI EN20898/2<br>Gasket TPM: NBR<br>Piston: Steel 9SMn28<br>Gasket OR: NBR Fluorosil Viton<br>Gasket TSE-TTS-TTI/L: NBR + fabric / polyurethane<br>Gasket GHM-GHK: NBR / polyurethane |

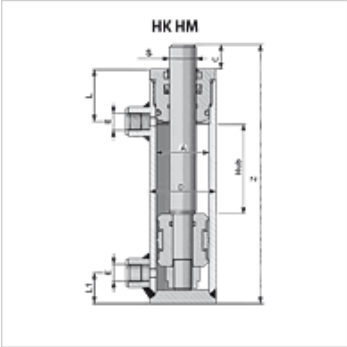


## Note

Piston speed based on standard seals: Max. 25m/min - 0.42m/sec.
Piston speed to the end positions: max. 6m/min - 0.10m/sec.
For these standard cylinders, it is recommended not to weld any fastenings to the cylinder liner (e.g. cardan mountings) as this could distort it.

## Description

Our hydraulic cylinders and their components are designed for standard applications in industry and agriculture. They can be used only in some circumstances for applications in construction machinery. If this is your intention, please contact our technical personnel. The cylinders conform to the technical specifications in the catalogue or are designed to customers' specifications (approval drawing).
Please observe the stipulations of EN ISO 4413 “Safety requirements for fluid power systems and their components” as well as specifications and safety requirements based on statutory regulations when selecting, installing and operating the cylinders.

## Item

| Identification | Ø D (mm) | Ø A (mm) | Ø S (mm) | Stroke (mm) | Z (mm) | C (mm) | E | L (mm) | L1 (mm) | Weight (kg) |
|---|---|---|---|---|---|---|---|---|---|---|
| **HK HM 01 20 0100** | 50 | 40 | 20 | 100 | 230 | 22,0 | G 1/4” | 40 | 23 | 2,27 |
| **HK HM 01 20 0150** | 50 | 40 | 20 | 150 | 280 | 22,0 | G 1/4” | 40 | 23 | 2,67 |
| **HK HM 01 20 0200** | 50 | 40 | 20 | 200 | 330 | 22,0 | G 1/4” | 40 | 23 | 3,05 |
| **HK HM 01 20 0250** | 50 | 40 | 20 | 250 | 380 | 22,0 | G 1/4” | 40 | 23 | 3,45 |
| **HK HM 01 20 0300** | 50 | 40 | 20 | 300 | 430 | 22,0 | G 1/4” | 40 | 23 | 3,85 |
| **HK HM 01 20 0350** | 50 | 40 | 20 | 350 | 480 | 22,0 | G 1/4” | 40 | 23 | 4,27 |
| **HK HM 01 20 0400** | 50 | 40 | 20 | 400 | 530 | 22,0 | G 1/4” | 40 | 23 | 4,65 |
| **HK HM 01 20 0450** | 50 | 40 | 20 | 450 | 580 | 22,0 | G 1/4” | 40 | 23 | 5,08 |
| **HK HM 01 20 0500** | 50 | 40 | 20 | 500 | 630 | 22,0 | G 1/4” | 40 | 23 | 5,49 |
| | | | | | | | | | | |
| **HK HM 01 25 0100** | 50 | 40 | 25 | 100 | 230 | 22,0 | G 1/4” | 40 | 23 | 2,75 |
| **HK HM 01 25 0150** | 50 | 40 | 25 | 150 | 280 | 22,0 | G 1/4” | 40 | 23 | 2,95 |
| **HK HM 01 25 0200** | 50 | 40 | 25 | 200 | 330 | 22,0 | G 1/4” | 40 | 23 | 3,39 |
| **HK HM 01 25 0250** | 50 | 40 | 25 | 250 | 380 | 22,0 | G 1/4” | 40 | 23 | 3,85 |
| **HK HM 01 25 0300** | 50 | 40 | 25 | 300 | 430 | 22,0 | G 1/4” | 40 | 23 | 4,32 |
| **HK HM 01 25 0350** | 50 | 40 | 25 | 350 | 480 | 22,0 | G 1/4” | 40 | 23 | 4,79 |
| **HK HM 01 25 0400** | 50 | 40 | 25 | 400 | 530 | 22,0 | G 1/4” | 40 | 23 | 5,26 |
| **HK HM 01 25 0450** | 50 | 40 | 25 | 450 | 580 | 22,0 | G 1/4” | 40 | 23 | 5,72 |
| **HK HM 01 25 0500** | 50 | 40 | 25 | 500 | 630 | 22,0 | G 1/4” | 40 | 23 | 6,20 |
| **HK HM 01 25 0550** | 50 | 40 | 25 | 550 | 680 | 22,0 | G 1/4” | 40 | 23 | 6,60 |
| **HK HM 01 25 0600** | 50 | 40 | 25 | 600 | 730 | 22,0 | G 1/4” | 40 | 23 | 7,13 |
| **HK HM 02 25 0100** | 60 | 50 | 25 | 100 | 240 | 22,0 | G 3/8” | 43 | 26 | 3,29 |
| **HK HM 02 25 0150** | 60 | 50 | 25 | 150 | 290 | 22,0 | G 3/8” | 43 | 26 | 3,83 |
| **HK HM 02 25 0200** | 60 | 50 | 25 | 200 | 340 | 22,0 | G 3/8” | 43 | 26 | 4,34 |
| **HK HM 02 25 0250** | 60 | 50 | 25 | 250 | 390 | 22,0 | G 3/8” | 43 | 26 | 4,85 |
| **HK HM 02 25 0300** | 60 | 50 | 25 | 300 | 440 | 22,0 | G 3/8” | 43 | 26 | 5,35 |
| **HK HM 02 25 0350** | 60 | 50 | 25 | 350 | 490 | 22,0 | G 3/8” | 43 | 26 | 5,94 |
| **HK HM 02 25 0400** | 60 | 50 | 25 | 400 | 540 | 22,0 | G 3/8” | 43 | 26 | 6,40 |
| **HK HM 02 25 0450** | 60 | 50 | 25 | 450 | 590 | 22,0 | G 3/8” | 43 | 26 | 7,30 |

*Despite careful checking, we cannot guarantee the accuracy of all information included on this site, and we accept no liability.*

# HK HM

Standard double-acting cylinders without fastening

HANSA FLEX

| Item<br>Identification | Ø D<br>(mm) | Ø A<br>(mm) | Ø S<br>(mm) | Stroke<br>(mm) | Z<br>(mm) | C<br>(mm) | E | L<br>(mm) | L1<br>(mm) | Weight<br>(kg) |
|---|---|---|---|---|---|---|---|---|---|---|
| **HK HM 02 25 0500** | 60 | 50 | 25 | 500 | 640 | 22,0 | G 3/8” | 43 | 26 | 7,43 |
| **HK HM 02 25 0550** | 60 | 50 | 25 | 550 | 690 | 22,0 | G 3/8” | 43 | 26 | 8,06 |
| **HK HM 02 25 0600** | 60 | 50 | 25 | 600 | 740 | 22,0 | G 3/8” | 43 | 26 | 8,46 |
| **HK HM 02 25 0800** | 60 | 50 | 25 | 800 | 940 | 22,0 | G 3/8” | 43 | 26 | 10,71 |
| **HK HM 02 25 1000** | 60 | 50 | 25 | 1000 | 1140 | 22,0 | G 3/8” | 43 | 26 | 12,87 |
| **HK HM 02 30 0150** | 60 | 50 | 30 | 150 | 290 | 22,0 | G 3/8” | 43 | 26 | 4,11 |
| **HK HM 02 30 0200** | 60 | 50 | 30 | 200 | 340 | 22,0 | G 3/8” | 43 | 26 | 4,74 |
| **HK HM 02 30 0250** | 60 | 50 | 30 | 250 | 390 | 22,0 | G 3/8” | 43 | 26 | 5,35 |
| **HK HM 02 30 0300** | 60 | 50 | 30 | 300 | 440 | 22,0 | G 3/8” | 43 | 26 | 5,97 |
| **HK HM 02 30 0350** | 60 | 50 | 30 | 350 | 490 | 22,0 | G 3/8” | 43 | 26 | 6,55 |
| **HK HM 02 30 0400** | 60 | 50 | 30 | 400 | 540 | 22,0 | G 3/8” | 43 | 26 | 7,20 |
| **HK HM 02 30 0450** | 60 | 50 | 30 | 450 | 590 | 22,0 | G 3/8” | 43 | 26 | 7,80 |
| **HK HM 02 30 0500** | 60 | 50 | 30 | 500 | 640 | 22,0 | G 3/8” | 43 | 26 | 8,42 |
| **HK HM 02 30 0550** | 60 | 50 | 30 | 550 | 690 | 22,0 | G 3/8” | 43 | 26 | 9,04 |
| **HK HM 02 30 0600** | 60 | 50 | 30 | 600 | 740 | 22,0 | G 3/8” | 43 | 26 | 9,64 |
| **HK HM 02 30 0800** | 60 | 50 | 30 | 800 | 940 | 22,0 | G 3/8” | 43 | 26 | 12,10 |
| **HK HM 02 30 1000** | 60 | 50 | 30 | 1000 | 1140 | 22,0 | G 3/8” | 43 | 26 | 14,57 |
| **HK HM 03 30 0100** | 70 | 60 | 30 | 100 | 260 | 23,0 | G 3/8” | 50 | 30 | 4,82 |
| **HK HM 03 30 0150** | 70 | 60 | 30 | 150 | 310 | 23,0 | G 3/8” | 50 | 30 | 5,55 |
| **HK HM 03 30 0200** | 70 | 60 | 30 | 200 | 360 | 23,0 | G 3/8” | 50 | 30 | 6,20 |
| **HK HM 03 30 0250** | 70 | 60 | 30 | 250 | 410 | 23,0 | G 3/8” | 50 | 30 | 6,87 |
| **HK HM 03 30 0300** | 70 | 60 | 30 | 300 | 460 | 23,0 | G 3/8” | 50 | 30 | 7,55 |
| **HK HM 03 30 0350** | 70 | 60 | 30 | 350 | 510 | 23,0 | G 3/8” | 50 | 30 | 8,20 |
| **HK HM 03 30 0400** | 70 | 60 | 30 | 400 | 560 | 23,0 | G 3/8” | 50 | 30 | 8,90 |
| **HK HM 03 30 0450** | 70 | 60 | 30 | 450 | 610 | 23,0 | G 3/8” | 50 | 30 | 9,53 |
| **HK HM 03 30 0500** | 70 | 60 | 30 | 500 | 660 | 23,0 | G 3/8” | 50 | 30 | 10,25 |
| **HK HM 03 30 0550** | 70 | 60 | 30 | 550 | 710 | 23,0 | G 3/8” | 50 | 30 | 10,83 |
| **HK HM 03 30 0600** | 70 | 60 | 30 | 600 | 760 | 23,0 | G 3/8” | 50 | 30 | 11,60 |
| **HK HM 03 30 0800** | 70 | 60 | 30 | 800 | 960 | 23,0 | G 3/8” | 50 | 30 | 14,26 |
| **HK HM 03 30 1000** | 70 | 60 | 30 | 1000 | 1160 | 23,0 | G 3/8” | 50 | 30 | 17,00 |
| **HK HM 03 35 0100** | 70 | 60 | 35 | 100 | 260 | 23,0 | G 3/8” | 50 | 30 | 5,07 |
| **HK HM 03 35 0150** | 70 | 60 | 35 | 150 | 310 | 23,0 | G 3/8” | 50 | 30 | 5,85 |
| **HK HM 03 35 0200** | 70 | 60 | 35 | 200 | 360 | 23,0 | G 3/8” | 50 | 30 | 6,60 |
| **HK HM 03 35 0250** | 70 | 60 | 35 | 250 | 410 | 23,0 | G 3/8” | 50 | 30 | 7,40 |
| **HK HM 03 35 0300** | 70 | 60 | 35 | 300 | 460 | 23,0 | G 3/8” | 50 | 30 | 8,15 |
| **HK HM 03 35 0350** | 70 | 60 | 35 | 350 | 510 | 23,0 | G 3/8” | 50 | 30 | 8,94 |
| **HK HM 03 35 0400** | 70 | 60 | 35 | 400 | 560 | 23,0 | G 3/8” | 50 | 30 | 9,72 |
| **HK HM 03 35 0450** | 70 | 60 | 35 | 450 | 610 | 23,0 | G 3/8” | 50 | 30 | 10,47 |
| **HK HM 03 35 0500** | 70 | 60 | 35 | 500 | 660 | 23,0 | G 3/8” | 50 | 30 | 11,25 |
| **HK HM 03 35 0550** | 70 | 60 | 35 | 550 | 710 | 23,0 | G 3/8” | 50 | 30 | 12,00 |
| **HK HM 03 35 0600** | 70 | 60 | 35 | 600 | 760 | 23,0 | G 3/8” | 50 | 30 | 12,81 |
| **HK HM 03 35 0800** | 70 | 60 | 35 | 800 | 960 | 23,0 | G 3/8” | 50 | 30 | 15,87 |
| **HK HM 03 35 1000** | 70 | 60 | 35 | 1000 | 1160 | 23,0 | G 3/8” | 50 | 30 | 18,93 |
| **HK HM 03 40 0200** | 70 | 60 | 40 | 200 | 360 | 23,0 | G 3/8” | 50 | 30 | 7,25 |
| **HK HM 03 40 0250** | 70 | 60 | 40 | 250 | 410 | 23,0 | G 3/8” | 50 | 30 | 8,14 |
| **HK HM 03 40 0300** | 70 | 60 | 40 | 300 | 460 | 23,0 | G 3/8” | 50 | 30 | 9,03 |
| **HK HM 03 40 0350** | 70 | 60 | 40 | 350 | 510 | 23,0 | G 3/8” | 50 | 30 | 9,90 |
| **HK HM 03 40 0400** | 70 | 60 | 40 | 400 | 560 | 23,0 | G 3/8” | 50 | 30 | 10,79 |
| **HK HM 03 40 0450** | 70 | 60 | 40 | 450 | 610 | 23,0 | G 3/8” | 50 | 30 | 11,64 |
| **HK HM 03 40 0500** | 70 | 60 | 40 | 500 | 660 | 23,0 | G 3/8” | 50 | 30 | 12,52 |
| **HK HM 03 40 0550** | 70 | 60 | 40 | 550 | 710 | 23,0 | G 3/8” | 50 | 30 | 13,45 |
| **HK HM 03 40 0600** | 70 | 60 | 40 | 600 | 760 | 23,0 | G 3/8” | 50 | 30 | 14,30 |
| **HK HM 03 40 0800** | 70 | 60 | 40 | 800 | 960 | 23,0 | G 3/8” | 50 | 30 | 17,82 |
| **HK HM 03 40 1000** | 70 | 60 | 40 | 1000 | 1160 | 23,0 | G 3/8” | 50 | 30 | 21,40 |
| **HK HM 04 30 0200** | 80 | 70 | 30 | 200 | 360 | 23,0 | G 3/8” | 50 | 33 | 7,50 |
| **HK HM 04 35 0100** | 80 | 70 | 35 | 100 | 260 | 23,0 | G 3/8” | 50 | 33 | 6,09 |
| **HK HM 04 35 0150** | 80 | 70 | 35 | 150 | 310 | 23,0 | G 3/8” | 50 | 33 | 6,95 |
| **HK HM 04 35 0200** | 80 | 70 | 35 | 200 | 360 | 23,0 | G 3/8” | 50 | 33 | 7,74 |

*Despite careful checking, we cannot guarantee the accuracy of all information included on this site, and we accept no liability.*

# HK HM

Standard double-acting cylinders without fastening

HANSA FLEX

| Item<br>Identification | Ø D (mm) | Ø A (mm) | Ø S (mm) | Stroke (mm) | Z (mm) | C (mm) | E | L (mm) | L1 (mm) | Weight (kg) |
|---|---|---|---|---|---|---|---|---|---|---|
| **HK HM 04 35 0250** | 80 | 70 | 35 | 250 | 410 | 23,0 | G 3/8” | 50 | 33 | 8,60 |
| **HK HM 04 35 0300** | 80 | 70 | 35 | 300 | 460 | 23,0 | G 3/8” | 50 | 33 | 9,40 |
| **HK HM 04 35 0350** | 80 | 70 | 35 | 350 | 510 | 23,0 | G 3/8” | 50 | 33 | 10,26 |
| **HK HM 04 35 0400** | 80 | 70 | 35 | 400 | 560 | 23,0 | G 3/8” | 50 | 33 | 11,00 |
| **HK HM 04 35 0450** | 80 | 70 | 35 | 450 | 610 | 23,0 | G 3/8” | 50 | 33 | 11,88 |
| **HK HM 04 35 0500** | 80 | 70 | 35 | 500 | 660 | 23,0 | G 3/8” | 50 | 33 | 12,60 |
| **HK HM 04 35 0550** | 80 | 70 | 35 | 550 | 710 | 23,0 | G 3/8” | 50 | 33 | 13,66 |
| **HK HM 04 35 0600** | 80 | 70 | 35 | 600 | 760 | 23,0 | G 3/8” | 50 | 33 | 14,20 |
| **HK HM 04 35 0800** | 80 | 70 | 35 | 800 | 960 | 23,0 | G 3/8” | 50 | 33 | 17,56 |
| **HK HM 04 35 1000** | 80 | 70 | 35 | 1000 | 1160 | 23,0 | G 3/8” | 50 | 33 | 21,26 |
| | | | | | | | | | | |
| **HK HM 04 40 0100** | 80 | 70 | 40 | 100 | 260 | 23,0 | G 3/8” | 50 | 33 | 8,20 |
| **HK HM 04 40 0200** | 80 | 70 | 40 | 200 | 360 | 23,0 | G 3/8” | 50 | 33 | 8,20 |
| **HK HM 04 40 0250** | 80 | 70 | 40 | 250 | 410 | 23,0 | G 3/8” | 50 | 33 | 9,26 |
| **HK HM 04 40 0300** | 80 | 70 | 40 | 300 | 460 | 23,0 | G 3/8” | 50 | 33 | 10,24 |
| **HK HM 04 40 0350** | 80 | 70 | 40 | 350 | 510 | 23,0 | G 3/8” | 50 | 33 | 11,20 |
| **HK HM 04 40 0400** | 80 | 70 | 40 | 400 | 560 | 23,0 | G 3/8” | 50 | 33 | 12,80 |
| **HK HM 04 40 0450** | 80 | 70 | 40 | 450 | 610 | 23,0 | G 3/8” | 50 | 33 | 13,11 |
| **HK HM 04 40 0500** | 80 | 70 | 40 | 500 | 660 | 23,0 | G 3/8” | 50 | 33 | 14,01 |
| **HK HM 04 40 0550** | 80 | 70 | 40 | 550 | 710 | 23,0 | G 3/8” | 50 | 33 | 15,10 |
| **HK HM 04 40 0600** | 80 | 70 | 40 | 600 | 760 | 23,0 | G 3/8” | 50 | 33 | 15,99 |
| **HK HM 04 40 0800** | 80 | 70 | 40 | 800 | 960 | 23,0 | G 3/8” | 50 | 33 | 19,73 |
| **HK HM 04 40 1000** | 80 | 70 | 40 | 1000 | 1160 | 23,0 | G 3/8” | 50 | 33 | 23,51 |
| **HK HM 05 40 0200** | 92 | 80 | 40 | 200 | 380 | 25,0 | G 1/2” | 60 | 35 | 11,08 |
| **HK HM 05 40 0250** | 92 | 80 | 40 | 250 | 430 | 25,0 | G 1/2” | 60 | 35 | 12,22 |
| **HK HM 05 40 0300** | 92 | 80 | 40 | 300 | 480 | 25,0 | G 1/2” | 60 | 35 | 13,36 |
| **HK HM 05 40 0400** | 92 | 80 | 40 | 400 | 580 | 25,0 | G 1/2” | 60 | 35 | 15,56 |
| **HK HM 05 40 0500** | 92 | 80 | 40 | 500 | 680 | 25,0 | G 1/2” | 60 | 35 | 17,77 |
| **HK HM 05 40 0600** | 92 | 80 | 40 | 600 | 780 | 25,0 | G 1/2” | 60 | 35 | 19,98 |
| **HK HM 05 40 0800** | 92 | 80 | 40 | 800 | 980 | 25,0 | G 1/2” | 60 | 35 | 24,50 |
| **HK HM 05 40 1000** | 92 | 80 | 40 | 100 | 1180 | 25,0 | G 1/2” | 60 | 35 | 29,03 |
| | | | | | | | | | | |
| **HK HM 05 50 0200** | 92 | 80 | 50 | 200 | 380 | 25,0 | G 1/2” | 60 | 35 | 12,35 |
| **HK HM 05 50 0250** | 92 | 80 | 50 | 250 | 430 | 25,0 | G 1/2” | 60 | 35 | 13,73 |
| **HK HM 05 50 0300** | 92 | 80 | 50 | 300 | 480 | 25,0 | G 1/2” | 60 | 35 | 15,15 |
| **HK HM 05 50 0400** | 92 | 80 | 50 | 400 | 580 | 25,0 | G 1/2” | 60 | 35 | 17,93 |
| **HK HM 05 50 0500** | 92 | 80 | 50 | 500 | 680 | 25,0 | G 1/2” | 60 | 35 | 20,71 |
| **HK HM 05 50 0600** | 92 | 80 | 50 | 600 | 780 | 25,0 | G 1/2” | 60 | 35 | 23,49 |
| **HK HM 05 50 0800** | 92 | 80 | 50 | 800 | 980 | 25,0 | G 1/2” | 60 | 35 | 29,50 |
| **HK HM 05 50 1000** | 92 | 80 | 50 | 100 | 1180 | 25,0 | G 1/2” | 60 | 35 | 35,00 |
| **HK HM 06 50 0200** | 115 | 100 | 50 | 200 | 410 | 25,0 | G 1/2” | 82 | 38 | 19,50 |
| **HK HM 06 50 0250** | 115 | 100 | 50 | 250 | 460 | 25,0 | G 1/2” | 82 | 38 | 21,50 |
| **HK HM 06 50 0300** | 115 | 100 | 50 | 300 | 510 | 25,0 | G 1/2” | 82 | 38 | 23,00 |
| **HK HM 06 50 0400** | 115 | 100 | 50 | 400 | 610 | 25,0 | G 1/2” | 82 | 38 | 26,50 |
| **HK HM 06 50 0500** | 115 | 100 | 50 | 500 | 710 | 25,0 | G 1/2” | 82 | 38 | 30,00 |
| **HK HM 06 50 0600** | 115 | 100 | 50 | 600 | 810 | 25,0 | G 1/2” | 82 | 38 | 33,50 |
| **HK HM 06 50 0800** | 115 | 100 | 50 | 800 | 1010 | 25,0 | G 1/2” | 82 | 38 | 40,50 |
| **HK HM 06 50 1000** | 115 | 100 | 50 | 1000 | 1210 | 25,0 | G 1/2” | 82 | 38 | 47,50 |
| | | | | | | | | | | |
| **HK HM 06 60 0300** | 115 | 100 | 60 | 300 | 510 | 25,0 | G 1/2” | 82 | 38 | 25,50 |
| **HK HM 06 60 0400** | 115 | 100 | 60 | 400 | 610 | 25,0 | G 1/2” | 82 | 38 | 29,50 |
| **HK HM 06 60 0500** | 115 | 100 | 60 | 500 | 710 | 25,0 | G 1/2” | 82 | 38 | 33,50 |
| **HK HM 06 60 0600** | 115 | 100 | 60 | 600 | 810 | 25,0 | G 1/2” | 82 | 38 | 37,50 |
| **HK HM 06 60 0800** | 115 | 100 | 60 | 800 | 1010 | 25,0 | G 1/2” | 82 | 38 | 46,00 |
| **HK HM 06 60 1000** | 115 | 100 | 60 | 1000 | 1210 | 25,0 | G 1/2” | 82 | 38 | 54,50 |

Ø A = piston diameter – Ø S = piston rod diameter

*Despite careful checking, we cannot guarantee the accuracy of all information included on this site, and we accept no liability.*