HK HM

Standard double-acting cylinders without fastening

HANSA-FLEX

Properties

Design	without mounting elements
Operating pressure	max. 200 bar (acc. DIN EN 982)
Test pressure	max. 240 bar (acc. DIN EN 982)
Temp. range	Standard version -15 °C to +80 °C
Media	HLP fluids
Material	Piston rod: Steel 20MnV6, Chrome 25 µm ±/- 5 Piston rod: Resistance for 120 h in the NSS test according to ISO 3768 Piston rod guide: Steel 9SMn28 Oil filler neck: Steel 9SMn28 Polished cylinder barrel: ST 52.3 DIN 2393-ISO H9 Cylinder base: FE 510-A105 Nut: Steel 8UNI EN20898/2 Gasket TPM: NBR Piston: Steel 9SMn28 Gasket OR: NBR Fluorosil Viton Gasket TSE-TTS-TTI/L: NBR + fabric / polyurethane Gasket GHM-GHK: NBR / polyurethane



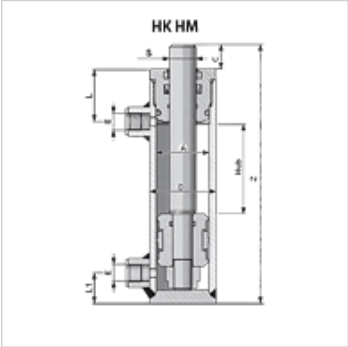

Note

Piston speed based on standard seals: Max. 25m/min - 0.42m/sec.
Piston speed to the end positions: max. 6m/min - 0.10m/sec.
For these standard cylinders, it is recommended not to weld any fastenings to the cylinder liner (e.g. cardan mountings) as this could distort it.

Description

Our hydraulic cylinders and their components are designed for standard applications in industry and agriculture. They can be used only in some circumstances for applications in construction machinery. If this is your intention, please contact our technical personnel. The cylinders conform to the technical specifications in the catalogue or are designed to customers' specifications (approval drawing).
Please observe the stipulations of EN ISO 4413 “Safety requirements for fluid power systems and their components” as well as specifications and safety requirements based on statutory regulations when selecting, installing and operating the cylinders.

Item

Identification	Ø D (mm)	Ø A (mm)	Ø S (mm)	Stroke (mm)	Z (mm)	C (mm)	E	L (mm)	L1 (mm)	Weight (kg)
HK HM 01 20 0100	50	40	20	100	230	22,0	G 1/4”	40	23	2,27
HK HM 01 20 0150	50	40	20	150	280	22,0	G 1/4”	40	23	2,67
HK HM 01 20 0200	50	40	20	200	330	22,0	G 1/4”	40	23	3,05
HK HM 01 20 0250	50	40	20	250	380	22,0	G 1/4”	40	23	3,45
HK HM 01 20 0300	50	40	20	300	430	22,0	G 1/4”	40	23	3,85
HK HM 01 20 0350	50	40	20	350	480	22,0	G 1/4”	40	23	4,27
HK HM 01 20 0400	50	40	20	400	530	22,0	G 1/4”	40	23	4,65
HK HM 01 20 0450	50	40	20	450	580	22,0	G 1/4”	40	23	5,08
HK HM 01 20 0500	50	40	20	500	630	22,0	G 1/4”	40	23	5,49
HK HM 01 25 0100	50	40	25	100	230	22,0	G 1/4”	40	23	2,75
HK HM 01 25 0150	50	40	25	150	280	22,0	G 1/4”	40	23	2,95
HK HM 01 25 0200	50	40	25	200	330	22,0	G 1/4”	40	23	3,39
HK HM 01 25 0250	50	40	25	250	380	22,0	G 1/4”	40	23	3,85
HK HM 01 25 0300	50	40	25	300	430	22,0	G 1/4”	40	23	4,32
HK HM 01 25 0350	50	40	25	350	480	22,0	G 1/4”	40	23	4,79
HK HM 01 25 0400	50	40	25	400	530	22,0	G 1/4”	40	23	5,26
HK HM 01 25 0450	50	40	25	450	580	22,0	G 1/4”	40	23	5,72
HK HM 01 25 0500	50	40	25	500	630	22,0	G 1/4”	40	23	6,20
HK HM 01 25 0550	50	40	25	550	680	22,0	G 1/4”	40	23	6,60
HK HM 01 25 0600	50	40	25	600	730	22,0	G 1/4”	40	23	7,13
HK HM 02 25 0100	60	50	25	100	240	22,0	G 3/8”	43	26	3,29
HK HM 02 25 0150	60	50	25	150	290	22,0	G 3/8”	43	26	3,83
HK HM 02 25 0200	60	50	25	200	340	22,0	G 3/8”	43	26	4,34
HK HM 02 25 0250	60	50	25	250	390	22,0	G 3/8”	43	26	4,85
HK HM 02 25 0300	60	50	25	300	440	22,0	G 3/8”	43	26	5,35
HK HM 02 25 0350	60	50	25	350	490	22,0	G 3/8”	43	26	5,94
HK HM 02 25 0400	60	50	25	400	540	22,0	G 3/8”	43	26	6,40
HK HM 02 25 0450	60	50	25	450	590	22,0	G 3/8”	43	26	7,30

Despite careful checking, we cannot guarantee the accuracy of all information included on this site, and we accept no liability.

HK HM

Standard double-acting cylinders without fastening

HANSA-FLEX

Item										
Identification	Ø D (mm)	Ø A (mm)	Ø S (mm)	Stroke (mm)	Z (mm)	C (mm)	E	L (mm)	L1 (mm)	Weight (kg)
HK HM 02 25 0500	60	50	25	500	640	22,0	G 3/8"	43	26	7,43
HK HM 02 25 0550	60	50	25	550	690	22,0	G 3/8"	43	26	8,06
HK HM 02 25 0600	60	50	25	600	740	22,0	G 3/8"	43	26	8,46
HK HM 02 25 0800	60	50	25	800	940	22,0	G 3/8"	43	26	10,71
HK HM 02 25 1000	60	50	25	1000	1140	22,0	G 3/8"	43	26	12,87
HK HM 02 30 0150	60	50	30	150	290	22,0	G 3/8"	43	26	4,11
HK HM 02 30 0200	60	50	30	200	340	22,0	G 3/8"	43	26	4,74
HK HM 02 30 0250	60	50	30	250	390	22,0	G 3/8"	43	26	5,35
HK HM 02 30 0300	60	50	30	300	440	22,0	G 3/8"	43	26	5,97
HK HM 02 30 0350	60	50	30	350	490	22,0	G 3/8"	43	26	6,55
HK HM 02 30 0400	60	50	30	400	540	22,0	G 3/8"	43	26	7,20
HK HM 02 30 0450	60	50	30	450	590	22,0	G 3/8"	43	26	7,80
HK HM 02 30 0500	60	50	30	500	640	22,0	G 3/8"	43	26	8,42
HK HM 02 30 0550	60	50	30	550	690	22,0	G 3/8"	43	26	9,04
HK HM 02 30 0600	60	50	30	600	740	22,0	G 3/8"	43	26	9,64
HK HM 02 30 0800	60	50	30	800	940	22,0	G 3/8"	43	26	12,10
HK HM 02 30 1000	60	50	30	1000	1140	22,0	G 3/8"	43	26	14,57
HK HM 03 30 0100	70	60	30	100	260	23,0	G 3/8"	50	30	4,82
HK HM 03 30 0150	70	60	30	150	310	23,0	G 3/8"	50	30	5,55
HK HM 03 30 0200	70	60	30	200	360	23,0	G 3/8"	50	30	6,20
HK HM 03 30 0250	70	60	30	250	410	23,0	G 3/8"	50	30	6,87
HK HM 03 30 0300	70	60	30	300	460	23,0	G 3/8"	50	30	7,55
HK HM 03 30 0350	70	60	30	350	510	23,0	G 3/8"	50	30	8,20
HK HM 03 30 0400	70	60	30	400	560	23,0	G 3/8"	50	30	8,90
HK HM 03 30 0450	70	60	30	450	610	23,0	G 3/8"	50	30	9,53
HK HM 03 30 0500	70	60	30	500	660	23,0	G 3/8"	50	30	10,25
HK HM 03 30 0550	70	60	30	550	710	23,0	G 3/8"	50	30	10,83
HK HM 03 30 0600	70	60	30	600	760	23,0	G 3/8"	50	30	11,60
HK HM 03 30 0800	70	60	30	800	960	23,0	G 3/8"	50	30	14,26
HK HM 03 30 1000	70	60	30	1000	1160	23,0	G 3/8"	50	30	17,00
HK HM 03 35 0100	70	60	35	100	260	23,0	G 3/8"	50	30	5,07
HK HM 03 35 0150	70	60	35	150	310	23,0	G 3/8"	50	30	5,85
HK HM 03 35 0200	70	60	35	200	360	23,0	G 3/8"	50	30	6,60
HK HM 03 35 0250	70	60	35	250	410	23,0	G 3/8"	50	30	7,40
HK HM 03 35 0300	70	60	35	300	460	23,0	G 3/8"	50	30	8,15
HK HM 03 35 0350	70	60	35	350	510	23,0	G 3/8"	50	30	8,94
HK HM 03 35 0400	70	60	35	400	560	23,0	G 3/8"	50	30	9,72
HK HM 03 35 0450	70	60	35	450	610	23,0	G 3/8"	50	30	10,47
HK HM 03 35 0500	70	60	35	500	660	23,0	G 3/8"	50	30	11,25
HK HM 03 35 0550	70	60	35	550	710	23,0	G 3/8"	50	30	12,00
HK HM 03 35 0600	70	60	35	600	760	23,0	G 3/8"	50	30	12,81
HK HM 03 35 0800	70	60	35	800	960	23,0	G 3/8"	50	30	15,87
HK HM 03 35 1000	70	60	35	1000	1160	23,0	G 3/8"	50	30	18,93
HK HM 03 40 0200	70	60	40	200	360	23,0	G 3/8"	50	30	7,25
HK HM 03 40 0250	70	60	40	250	410	23,0	G 3/8"	50	30	8,14
HK HM 03 40 0300	70	60	40	300	460	23,0	G 3/8"	50	30	9,03
HK HM 03 40 0350	70	60	40	350	510	23,0	G 3/8"	50	30	9,90
HK HM 03 40 0400	70	60	40	400	560	23,0	G 3/8"	50	30	10,79
HK HM 03 40 0450	70	60	40	450	610	23,0	G 3/8"	50	30	11,64
HK HM 03 40 0500	70	60	40	500	660	23,0	G 3/8"	50	30	12,52
HK HM 03 40 0550	70	60	40	550	710	23,0	G 3/8"	50	30	13,45
HK HM 03 40 0600	70	60	40	600	760	23,0	G 3/8"	50	30	14,30
HK HM 03 40 0800	70	60	40	800	960	23,0	G 3/8"	50	30	17,82
HK HM 03 40 1000	70	60	40	1000	1160	23,0	G 3/8"	50	30	21,40
HK HM 04 30 0200	80	70	30	200	360	23,0	G 3/8"	50	33	7,50
HK HM 04 35 0100	80	70	35	100	260	23,0	G 3/8"	50	33	6,09
HK HM 04 35 0150	80	70	35	150	310	23,0	G 3/8"	50	33	6,95
HK HM 04 35 0200	80	70	35	200	360	23,0	G 3/8"	50	33	7,74

Despite careful checking, we cannot guarantee the accuracy of all information included on this site, and we accept no liability.

HK HM

Standard double-acting cylinders without fastening

HANSA-FLEX

Item										
Identification	Ø D (mm)	Ø A (mm)	Ø S (mm)	Stroke (mm)	Z (mm)	C (mm)	E	L (mm)	L1 (mm)	Weight (kg)
HK HM 04 35 0250	80	70	35	250	410	23,0	G 3/8”	50	33	8,60
HK HM 04 35 0300	80	70	35	300	460	23,0	G 3/8”	50	33	9,40
HK HM 04 35 0350	80	70	35	350	510	23,0	G 3/8”	50	33	10,26
HK HM 04 35 0400	80	70	35	400	560	23,0	G 3/8”	50	33	11,00
HK HM 04 35 0450	80	70	35	450	610	23,0	G 3/8”	50	33	11,88
HK HM 04 35 0500	80	70	35	500	660	23,0	G 3/8”	50	33	12,60
HK HM 04 35 0550	80	70	35	550	710	23,0	G 3/8”	50	33	13,66
HK HM 04 35 0600	80	70	35	600	760	23,0	G 3/8”	50	33	14,20
HK HM 04 35 0800	80	70	35	800	960	23,0	G 3/8”	50	33	17,56
HK HM 04 35 1000	80	70	35	1000	1160	23,0	G 3/8”	50	33	21,26
HK HM 04 40 0100	80	70	40	100	260	23,0	G 3/8”	50	33	8,20
HK HM 04 40 0200	80	70	40	200	360	23,0	G 3/8”	50	33	8,20
HK HM 04 40 0250	80	70	40	250	410	23,0	G 3/8”	50	33	9,26
HK HM 04 40 0300	80	70	40	300	460	23,0	G 3/8”	50	33	10,24
HK HM 04 40 0350	80	70	40	350	510	23,0	G 3/8”	50	33	11,20
HK HM 04 40 0400	80	70	40	400	560	23,0	G 3/8”	50	33	12,80
HK HM 04 40 0450	80	70	40	450	610	23,0	G 3/8”	50	33	13,11
HK HM 04 40 0500	80	70	40	500	660	23,0	G 3/8”	50	33	14,01
HK HM 04 40 0550	80	70	40	550	710	23,0	G 3/8”	50	33	15,10
HK HM 04 40 0600	80	70	40	600	760	23,0	G 3/8”	50	33	15,99
HK HM 04 40 0800	80	70	40	800	960	23,0	G 3/8”	50	33	19,73
HK HM 04 40 1000	80	70	40	1000	1160	23,0	G 3/8”	50	33	23,51
HK HM 05 40 0200	92	80	40	200	380	25,0	G 1/2”	60	35	11,08
HK HM 05 40 0250	92	80	40	250	430	25,0	G 1/2”	60	35	12,22
HK HM 05 40 0300	92	80	40	300	480	25,0	G 1/2”	60	35	13,36
HK HM 05 40 0400	92	80	40	400	580	25,0	G 1/2”	60	35	15,56
HK HM 05 40 0500	92	80	40	500	680	25,0	G 1/2”	60	35	17,77
HK HM 05 40 0600	92	80	40	600	780	25,0	G 1/2”	60	35	19,98
HK HM 05 40 0800	92	80	40	800	980	25,0	G 1/2”	60	35	24,50
HK HM 05 40 1000	92	80	40	100	1180	25,0	G 1/2”	60	35	29,03
HK HM 05 50 0200	92	80	50	200	380	25,0	G 1/2”	60	35	12,35
HK HM 05 50 0250	92	80	50	250	430	25,0	G 1/2”	60	35	13,73
HK HM 05 50 0300	92	80	50	300	480	25,0	G 1/2”	60	35	15,15
HK HM 05 50 0400	92	80	50	400	580	25,0	G 1/2”	60	35	17,93
HK HM 05 50 0500	92	80	50	500	680	25,0	G 1/2”	60	35	20,71
HK HM 05 50 0600	92	80	50	600	780	25,0	G 1/2”	60	35	23,49
HK HM 05 50 0800	92	80	50	800	980	25,0	G 1/2”	60	35	29,50
HK HM 05 50 1000	92	80	50	100	1180	25,0	G 1/2”	60	35	35,00
HK HM 06 50 0200	115	100	50	200	410	25,0	G 1/2”	82	38	19,50
HK HM 06 50 0250	115	100	50	250	460	25,0	G 1/2”	82	38	21,50
HK HM 06 50 0300	115	100	50	300	510	25,0	G 1/2”	82	38	23,00
HK HM 06 50 0400	115	100	50	400	610	25,0	G 1/2”	82	38	26,50
HK HM 06 50 0500	115	100	50	500	710	25,0	G 1/2”	82	38	30,00
HK HM 06 50 0600	115	100	50	600	810	25,0	G 1/2”	82	38	33,50
HK HM 06 50 0800	115	100	50	800	1010	25,0	G 1/2”	82	38	40,50
HK HM 06 50 1000	115	100	50	1000	1210	25,0	G 1/2”	82	38	47,50
HK HM 06 60 0300	115	100	60	300	510	25,0	G 1/2”	82	38	25,50
HK HM 06 60 0400	115	100	60	400	610	25,0	G 1/2”	82	38	29,50
HK HM 06 60 0500	115	100	60	500	710	25,0	G 1/2”	82	38	33,50
HK HM 06 60 0600	115	100	60	600	810	25,0	G 1/2”	82	38	37,50
HK HM 06 60 0800	115	100	60	800	1010	25,0	G 1/2”	82	38	46,00
HK HM 06 60 1000	115	100	60	1000	1210	25,0	G 1/2”	82	38	54,50

Ø A = piston diameter – Ø S = piston rod diameter

Despite careful checking, we cannot guarantee the accuracy of all information included on this site, and we accept no liability.