HK K1 CON

Gear pump, size 1 K1 CON

Properties

Design	housing type BH (attachment top right-hand, bottom left-hand)
Cover connection, suction side	G 3/8”
Flange connection, pressure side	Ø 9.25 (Quadring 9.25x1.78 NBR 70Sh)
Material	Housing: Aluminium Front flange, end cover: Aluminium



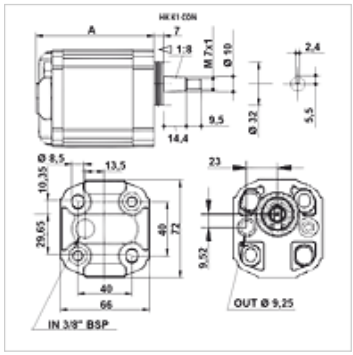

Description

European standard pump – hole pattern 40 x 40 – dia. 32 – taper 1:8

Item

Identification	VFU (ccm) (cc)	p1 max. (bar)	p2 max. (bar)	p3 max. (bar)	A (mm)	Direction of rotation	Speed min. (rpm)	Speed max. (rpm)	Weight (kg)
HK K 10 CON	0,92	220	240	280	77,1	anti-clockwise rotating	700	6000	0,80
HK K 11 CON	1,17	220	250	290	78,0	anti-clockwise rotating	700	6000	0,83
HK K 12 CON	1,56	220	250	290	79,5	anti-clockwise rotating	700	6000	0,85
HK K 13 CON	2,08	220	250	290	81,5	anti-clockwise rotating	700	6000	0,89
HK K 14 CON	2,60	220	250	290	83,5	anti-clockwise rotating	700	6000	0,90
HK K 15 CON	3,12	220	260	300	85,5	anti-clockwise rotating	700	6000	0,93
HK K 16 CON	3,64	220	260	300	87,5	anti-clockwise rotating	700	6000	0,96
HK K 17 CON	4,16	220	260	300	89,5	anti-clockwise rotating	700	6000	0,98
HK K 18 CON	4,94	220	260	300	92,5	anti-clockwise rotating	700	6000	1,01
HK K 19 CON	5,85	220	260	300	96,0	anti-clockwise rotating	700	5000	1,08
HK K 19 A CON	6,50	220	260	300	97,5	anti-clockwise rotating	700	5000	1,09
HK K 20 CON	7,54	210	230	260	102,5	anti-clockwise rotating	700	5000	1,10
HK K 21 CON	9,88	190	210	230	111,5	anti-clockwise rotating	700	4000	1,20

VFU = conveying volume per revolution – p1 = continuous pressure – p2 = working pressure – p3 = maximum pressure

Despite careful checking, we cannot guarantee the accuracy of all information included on this site, and we accept no liability.