HK STX

Flat cylinders 700 bar single-acting with lock nut

Properties

Design	Hardened valvehead hard chrome-plated pistons max. stroke 50 mm retraction on load with lock nut for positive and safe load holding
Operating pressure	max. 700 bar
Material	Steel
Scope of supply	with female quick coupling 3/8"-18 NPT



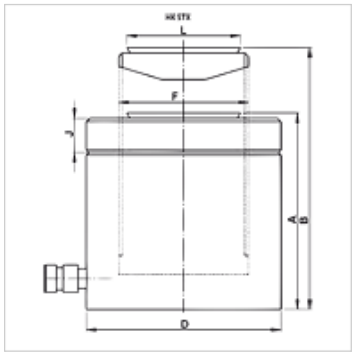

Note

Attention: Please observe separate safety precautions for working with 700 bar equipment (see technical information)!

Description

Flat cylinders combine compact design with maximum stroke. Ideal where space is at a premium.
Care must be taken that no lateral forces are transmitted to the guide rings.
Flat, compact design
Plunger wiper seals to prevent soiling
All cylinders have a moving thrust piece and special coating for enhanced corrosion protection.

Item

Identification	(kN)	(t)	Stroke (mm)	Area (cm2)	A (mm)	B (mm)	D (mm)	F	J (mm)	L (mm)	Volume (cc)	Weight (kg)
HK STX 05005	486,0	50	50	70,8	125	175	120	Tr 95 x 4	21,0	92,0	355	11
HK STX 14004	1380,0	140	45	200,9	148	193	205	Tr 160 x 6	38,0	147,5	905	39

Accessories

NY 2100	Thermoplastic extreme pressure hose
GKS	Rubber antikink protection
PNY 2100 HN	Swage nipple, AGN
PHY 2100	Swage ferrule, NY 2100
SKL HN SP	Screwed coupling, loose half
SKL ZUBS SP	Dust protection for SKL...SP
SKF IN SP	Screwed coupling fixed half
SKF ZUBS SP	Dust protection for SKF...SP

Despite careful checking, we cannot guarantee the accuracy of all information included on this site, and we accept no liability.