HK SU 2
Pump supports

Properties

Use	For European standard gear pumps BG2



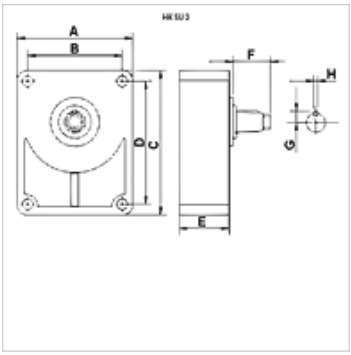

Description

Pump supports are employed on gear pumps that are driven e.g. by V-belts or chains and are thus subject to higher radial loads.
A corresponding coupling hub is required for the connection between pump and pump support. (Please order separately!)
Grease according to DIN 51502 is recommended for lubrication.
Connection only for European standard pumps.

Item

Identification	for pump	A (mm)	B (mm)	C (mm)	D (mm)	E (mm)	F (mm)	G (mm)	H (mm)	Hub	Shaft	Weight (kg)
HK SU 2 C	BG 2 European Standard	88,5	71,4	113	96	49	40,0	9,5	6	HK BF 2T	Cylindrical dia. 18	1,40
HK SU 2 D	BG 2 European Standard	88,5	71,4	113	96	49	35,5	9,5	3	HK BF 2T	Conical shaft 1:8	1,40
HK SUR 2 C	BG 2 European Standard	91,0	71,4	120	96	52	50,0	9,5	6	HK BF 2T Z15	Cylindrical dia. 22	1,75
HK SUR 2 D	BG 2 European Standard	91,0	71,4	120	96	52	36,0	9,5	6	HK BF 2T Z15	Conical shaft 1:8	1,75

Hub = required coupling hub – BG2/BG3 - European standard pump

Accessories

HK BF	Coupling hub

Despite careful checking, we cannot guarantee the accuracy of all information included on this site, and we accept no liability.