HK V7 467

4/3-way changeover valve

HANSA-FLEX

Properties

Design	Type A - mid-position open Type C - mid-position closed
Material	Housing: cast iron, inner parts steel



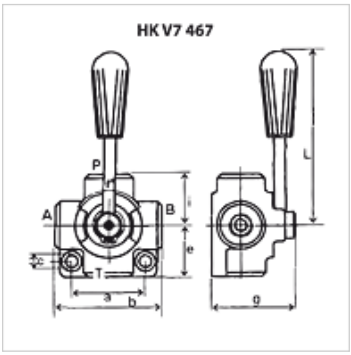

Note

Rotary slide valves can be pressurised from all sides and are designed to have less internal leakage

Item

Identification	Pressure max. (bar)	Connections	Q max. (L/min)	a (mm)	b (mm)	c (mm)	e (mm)	g (mm)	i (mm)	L (mm)	Weight (kg)
HK V7 467 A06	250	3/8"	35	54	77	8,5	38,5	71	38,5	110	1,28
HK V7 467 A08	250	1/2"	50	68	90	8,5	45,0	80	45,0	120	1,90
HK V7 467 A12	220	3/4"	90	74	95	8,5	47,5	90	47,5	125	2,60
HK V7 467 C06	250	3/8"	35	54	77	8,5	38,5	71	38,5	110	1,28
HK V7 467 C08	250	1/2"	50	68	90	8,5	45,0	80	45,0	120	1,90
HK V7 467 C12	220	3/4"	90	74	95	8,5	47,5	90	47,5	125	2,60

Despite careful checking, we cannot guarantee the accuracy of all information included on this site, and we accept no liability.