HK V2 765 Z

Flow-control non-return valveV765Z

Properties

Design	Ball locking
Material	Housing: Cast iron Inside parts of steel
Media	Mineral oil
Operating pressure	max. 300 bar



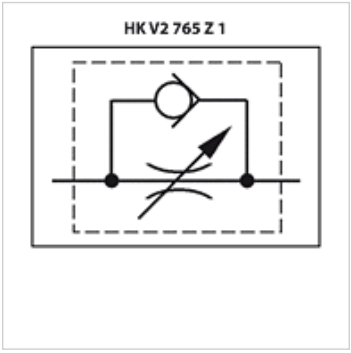

Note

These valves must be set according to the application.

Item

Identification	p max. (bar)	Q max. (L/min)	L (mm)	D (mm)	G	Weight (kg)
HK V2 765 Z400	300	20	66	34	G 1/4”	0,27
HK V2 765 Z600	300	45	77	36	G 3/8”	0,33
HK V2 765 Z800	300	70	80	42	G 1/2”	0,49
HK V2 765 Z1000	250	110	95	51	G 3/4”	0,83

Despite careful checking, we cannot guarantee the accuracy of all information included on this site, and we accept no liability.