WA VC

Connector ... VC, malleable cast iron

Properties

Application	Connection fitting for metal hoses
Connection 1	imperial outer thread, conical
Sealing form 1	conical seat
Standard	DIN EN 10226 / ISO 7-1
Application	soldered variant temperature resistant up to 200 °C
Construction	straight
Design	3-part threaded connection
Material	Malleable cast iron



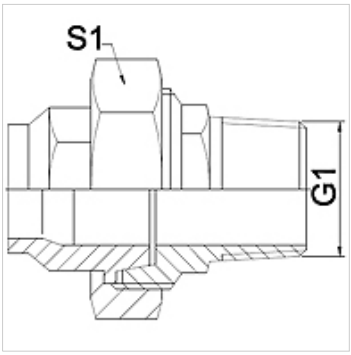

Note

Width across flats values are listed for reference purposes!
The specified working pressure PN(bar) relates to the working temperature of -20 °C to 120 °C. At working temperature of 120 °C to 200 °C the working pressure PN (bar) reduces to 22,7 bar.

Ordering information

Other designs available on request

Item

Identification	DN	PN (bar)	G1	S1 (mm)
WA 006 VC	6	25	R 1/4"	28,0
WA 010 VC	10	25	R 3/8"	32,0
WA 013 VC	13	25	R 1/2"	39,0
WA 020 VC	20	25	R 3/4"	48,0
WA 025 VC	25	25	R 1"	55,0
WA 032 VC	32	25	R 1.1/4"	67,0
WA 040 VC	40	25	R 1.1/2"	74,0
WA 050 VC	50	25	R 2"	90,0

Product versions

WA VC RG	Connector ... VC, red bronze, Red bronze
WA VC VA	Connector ... VC, VA, Stainless steel

Despite careful checking, we cannot guarantee the accuracy of all information included on this site, and we accept no liability.