# WA VC RG

Connector ... VC, red bronze

## Properties

| | |
|---|---|
| **Application** | Connection fitting for metal hoses |
| **Connection 1** | imperial outer thread, conical |
| **Sealing form 1** | conical seat |
| **Standard** | DIN EN 10226 / ISO 7-1 |
| **Application** | soldered variant temperature resistant up to 200 °C |
| **Construction** | straight |
| **Design** | 3-part threaded connection |
| **Material** | Red bronze |



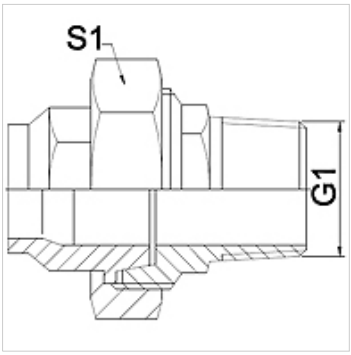


## Note

Width across flats values are listed for reference purposes!

## Ordering information

Other designs available on request

## Item

| Identification | DN | G1 | S1 (mm) |
|---|---|---|---|
| **WA 013 VC RG** | 13 | R 1/2" | 28,0 |
| **WA 020 VC RG** | 20 | R 3/4" | 32,0 |
| **WA 025 VC RG** | 25 | R 1" | 42,0 |
| **WA 032 VC RG** | 32 | R 1.1/4" | 50,0 |
| **WA 040 VC RG** | 40 | R 1.1/2" | 55,0 |
| **WA 050 VC RG** | 50 | R 2" | 70,0 |

## Product versions

| | |
|---|---|
| **WA VC** | Connector ... VC, malleable cast iron, Malleable cast iron |
| **WA VC VA** | Connector ... VC, VA, Stainless steel |

*Despite careful checking, we cannot guarantee the accuracy of all information included on this site, and we accept no liability.*