FI (Flansche)
Pump connection (4 hole)

HANSA-FLEX

Properties

Design	Pump connection (4 hole)
Construction	straight
Mounting	with metric screw set
Scope of supply	with screw set and O-ring
Material	Steel ST 42.3
Surface	electro galvanised



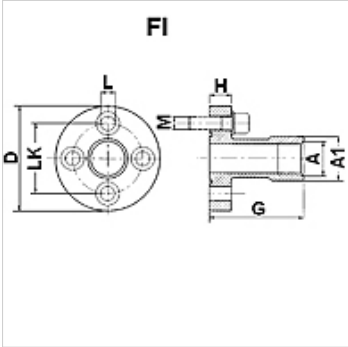

Note

The stated maximum working pressure relates to the flange. The actual working pressure is determined by the pipe (wall thickness) and the quality of the pipe.

Item

Identification	Pressure PB (bar)	LK (mm)	A	A1 (mm)	D (mm)	G (mm)	H (mm)	L (mm)	Screws	OR
FI 1	250	30	G 3/8" -19	21,0	45	55	10	6,5	(4 x) M 6 x 20	18.77 x 1.78
FI 2	250	40	G 1/2" -14	26,5	58	60	12	8,5	(4 x) M 8 x 25	25.12 x 1.78
FI 3 A	250	51	G 3/4" -14	33,5	76	72	16	10,5	(4 x) M 10 x 30	31.42 x 2.62
FI 3 B	250	56	G 3/4" -14	33,5	76	72	16	10,5	(4 x) M 10 x 30	31.42 x 2.62

PN = Nominal pressure PB = Max. operating pressure

Despite careful checking, we cannot guarantee the accuracy of all information included on this site, and we accept no liability.