WA HR VA

Connector ... HR, VA

Properties

Application	Connection fitting for metal hoses
Connection 1	BSP external thread, cylindrical
Sealing form 1	flat sealing
Standard	ISO 228-1
Short code	AGR-Flat
Construction	straight
Material	Stainless steel



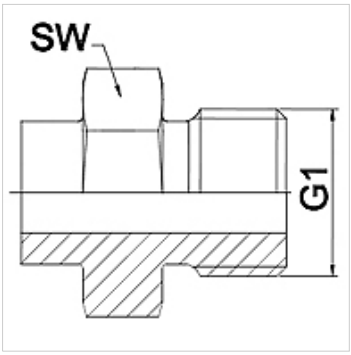

Note

Width across flats values are listed for reference purposes!

Ordering information

Other designs available on request

Item

Identification	DN	PN (bar)	G1	AF (mm)
WA 006 HR VA	6	350	G 1/4”	19
WA 010 HR VA	10	350	G 3/8”	22
WA 013 HR VA	13	315	G 1/2”	27
WA 016 HR VA	16	315	G 5/8"	30
WA 020 HR VA	20	250	G 3/4”	32
WA 025 HR VA	25	200	G 1"	41
WA 032 HR VA	32	160	G 1.1/4”	50
WA 040 HR VA	40	125	G 1.1/2”	55
WA 050 HR VA	50	80	G 2"	70
WA 065 HR VA	65	40	G 2.1/2"	85
WA 080 HR VA	80	40	G 3"	95

Product versions

WA HR	Connector ... HR, steel, Steel

Despite careful checking, we cannot guarantee the accuracy of all information included on this site, and we accept no liability.