# KLEMMSCHEL
Clamp, Aluminium

## Properties

| | |
|---|---|
| **Application** | Clamping components for small flange connections |
| **Design** | Clamp aluminum |
| **Standard** | DIN 28403<br>ISO 2861 |
| **Material** | Aluminium |
| **Temp. range** | Aluminium from -156 °C to 150 °C |



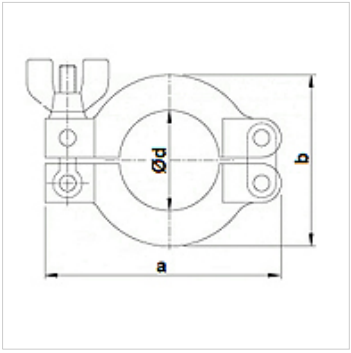


## Note

Pressure range from 10−7 mbar to 2.5 bar

## Ordering information

Other designs available on request

## Item

| Identification | Width (mm) | a (mm) | b (mm) | Ø d (mm) |
|---|---|---|---|---|
| **KLEMMSCHEL 010/16** | 17,0 | 63,0 | 45,0 | 22,0 |
| **KLEMMSCHEL 020/25** | 17,0 | 73,0 | 52,0 | 32,0 |
| **KLEMMSCHEL 032/40** | 17,0 | 93,0 | 70,0 | 47,0 |
| **KLEMMSCHEL 050** | 22,0 | 114,0 | 95,0 | 62,0 |

*Despite careful checking, we cannot guarantee the accuracy of all information included on this site, and we accept no liability.*