TRI KLAMMER VA

Clamp bracket, VA

Properties

Application	Clamping components for TRI-clamp connections
Standard	DIN 32676
Design	Clamp stainless steel
Material	Stainless steel



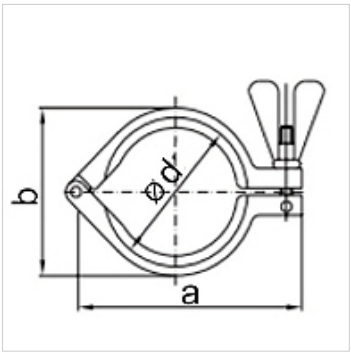

Ordering information

Other designs available on request

Item

Identification	a (mm)	b (mm)	Ø d (mm)
TRI KLAMMER 34 VA	63,0	45,0	34,0
TRI KLAMMER 50.5 VA	88,0	64,0	50,5
TRI KLAMMER 64 VA	105,0	77,0	64,0
TRI KLAMMER 91 VA	137,0	104,0	91,0
TRI KLAMMER 119 VA	168,0	132,0	119,0

Despite careful checking, we cannot guarantee the accuracy of all information included on this site, and we accept no liability.