WA AOS

Connector ... AOS, steel

Properties

Application	Connection fitting for metal hoses
Connection 1	metric nut thread
Sealing form 1	24° outer cone with O-ring
Standard	DIN 3865 ISO 8434-1
Short code	DKOS
Construction	straight
Series	heavy
Material	Steel (weldable)



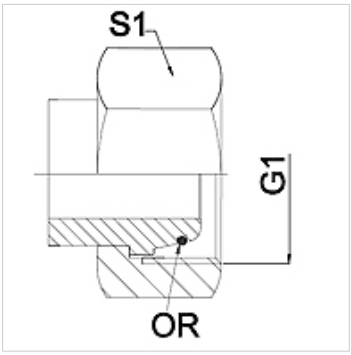

Note

Width across flats values are listed for reference purposes!

Ordering information

Other designs available on request

Item

Identification	DN	PN (bar)	G1	Series	S1 (mm)
WA 004 AOS	4	630	M 16 x 1.5	8S	19,0
WA 006 AOS	6	630	M 18 x 1.5	10 S	22,0
WA 008 AOS	8	630	M 20 x 1.5	12 S	24,0
WA 010 AOS	10	630	M 22 x 1.5	14 S	27,0
WA 013 AOS	13	400	M 24 x 1.5	16 S	30,0
WA 016 AOS	16	400	M 30 x 2	20 S	36,0
WA 020 AOS	20	400	M 36 x 2	25 S	46,0
WA 025 AOS	25	250	M 42 x 2	30 S	50,0
WA 032 AOS	32	250	M 52 x 2	38 S	60,0

Product versions

WA AOS VA	Connector ... AOS, VA, Stainless steel

Despite careful checking, we cannot guarantee the accuracy of all information included on this site, and we accept no liability.