WA AOS VA
Connector ... AOS, VA

Properties

Application	Connection fitting for metal hoses
Connection 1	metric nut thread
Sealing form 1	24° outer cone with O-ring
Standard	DIN 3865 ISO 8434-1
Short code	DKOS
Construction	straight
Series	heavy
Material	Stainless steel



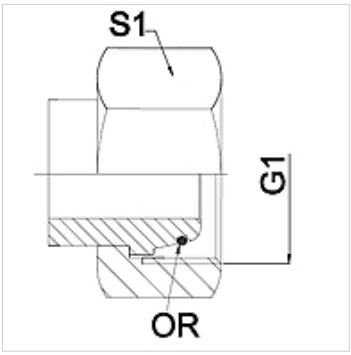

Note
Width across flats values are listed for reference purposes!

Ordering information
Other designs available on request

Item

Identification	DN	PN (bar)	G1	Series	S1 (mm)
WA 004 AOS VA	4	630	M 16 x 1.5	8S	19,0
WA 006 AOS VA	6	630	M 18 x 1.5	10 S	22,0
WA 008 AOS VA	8	630	M 20 x 1.5	12 S	24,0
WA 010 AOS VA	10	630	M 22 x 1.5	14 S	27,0
WA 013 AOS VA	13	400	M 24 x 1.5	16 S	30,0
WA 016 AOS VA	16	400	M 30 x 2	20 S	36,0
WA 020 AOS VA	20	400	M 36 x 2	25 S	46,0
WA 025 AOS VA	25	250	M 42 x 2	30 S	50,0
WA 032 AOS VA	32	250	M 52 x 2	38 S	60,0

Product versions

WA AOS	Connector ... AOS, steel, Steel (weldable)

Despite careful checking, we cannot guarantee the accuracy of all information included on this site, and we accept no liability.