WA AFS

Connector ... AFS, steel

Properties

Application	Connection fitting for metal hoses
Connection 1	metric nut thread
Sealing form 1	24° outer cone
Standard	matching connector adapter according to DIN 2353 / DIN EN ISO 8434-1
Short code	DKS
Construction	straight
Series	heavy
Material	Steel



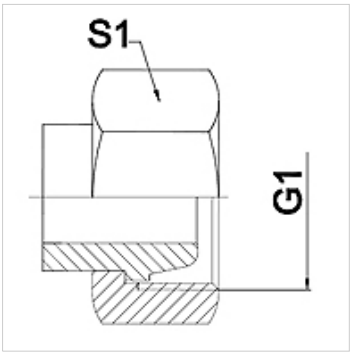

Note

Welded variant in stainless steel only

Width across flats values are listed for reference purposes!

Ordering information

Other designs available on request

Item

Identification	DN	PN (bar)	G1	Series	S1 (mm)
WA 004 AFS	4	630	M 16 x 1.5	8S	19,0
WA 006 AFS	6	630	M 18 x 1.5	10 S	22,0
WA 008 AFS	8	630	M 20 x 1.5	12 S	24,0
WA 010 AFS	10	630	M 22 x 1.5	14 S	27,0
WA 013 AFS	13	400	M 24 x 1.5	16 S	30,0
WA 016 AFS	16	400	M 30 x 2	20 S	36,0
WA 020 AFS	20	400	M 36 x 2	25 S	41,0
WA 025 AFS	25	250	M 42 x 2	30 S	50,0
WA 032 AFS	32	250	M 52 x 2	38 S	60,0

Product versions

WA AFS VA	Connector ... AFS, VA, Stainless steel

Despite careful checking, we cannot guarantee the accuracy of all information included on this site, and we accept no liability.