WA AFS VA

Connector ... AFS, VA

Properties

Application	Connection fitting for metal hoses
Connection 1	metric nut thread
Sealing form 1	24° outer cone
Standard	matching connector adapter according to DIN 2353 / DIN EN ISO 8434-1
Short code	DKS
Construction	straight
Series	heavy
Material	Stainless steel



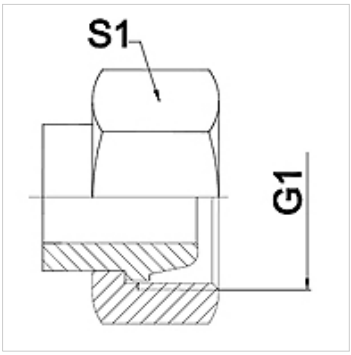

Note

Width across flats values are listed for reference purposes!

Ordering information

Other designs available on request

Item

Identification	DN	PN (bar)	G1	Series	S1 (mm)
WA 004 AFS VA	4	630	M 16 x 1.5	8S	19,0
WA 006 AFS VA	6	630	M 18 x 1.5	10 S	22,0
WA 008 AFS VA	8	630	M 20 x 1.5	12 S	24,0
WA 010 AFS VA	10	630	M 22 x 1.5	14 S	27,0
WA 013 AFS VA	13	400	M 24 x 1.5	16 S	30,0
WA 016 AFS VA	16	400	M 30 x 2	20 S	36,0
WA 020 AFS VA	20	400	M 36 x 2	25 S	46,0
WA 025 AFS VA	25	250	M 42 x 2	30 S	50,0
WA 032 AFS VA	32	250	M 52 x 2	38 S	60,0

Product versions

WA AFS	Connector ... AFS, steel, Steel

Despite careful checking, we cannot guarantee the accuracy of all information included on this site, and we accept no liability.