WA AJ

Connector ... AJ, steel

Properties

Application	Connection fitting for metal hoses
Connection 1	UN/UNF nut threads
Sealing form 1	74° inner cone
Standard	SAE J514
Short code	DKJ
Construction	straight
Material	Steel



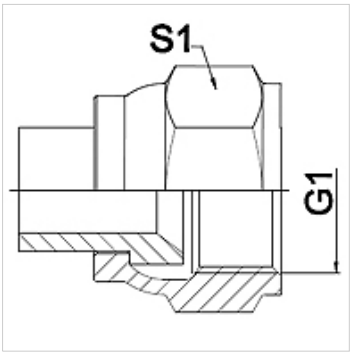

Note

Welded variant in stainless steel only
Width across flats values are listed for reference purposes!

Ordering information

Other designs available on request

Item

Identification	DN	PN (bar)	G1	S1 (mm)
WA 006 AJ	6	275	7/16"-20 UNF	14,0
WA 008 AJ	8	275	1/2"-20 UNF	17,0
WA 010 AJ	10	275	9/16"-18 UNF	19,0
WA 013 AJ	13	275	3/4"-16 UNF	24,0
WA 016 AJ	16	210	7/8" -14 UNF	27,0
WA 020 AJ	20	210	1.11/16" -12 UN	32,0
WA 025 AJ	25	170	1.5/16" -12 UN	41,0
WA 032 AJ	32	140	1.5/8" -12 UN	50,0
WA 040 AJ	40	105	1.7/8" -12 UN	60,0
WA 050 AJ	50	80	2.1/2" -12 UN	75,0

Product versions

WA AJ VA	Connector ... AJ, VA, Stainless steel

Despite careful checking, we cannot guarantee the accuracy of all information included on this site, and we accept no liability.