WA HB

Connector ... HB, steel

Properties

Application	Connection fitting for metal hoses
Connection 1	BSP external thread, cylindrical
Sealing form 1	60° inner cone
Standard	ISO 228-1 ISO 8434-6 BS 5200
Short code	AGR
Construction	straight
Material	Steel



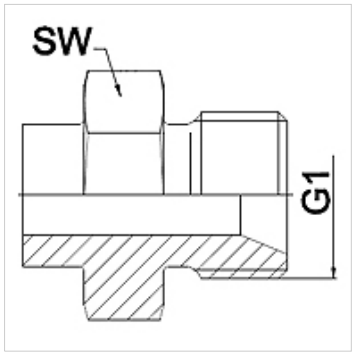

Note

Welded variant in stainless steel only

Width across flats values are listed for reference purposes!

Ordering information

Other designs available on request

Item

Identification	DN	PN (bar)	G1	AF (mm)
WA 006 HB	6	350	G 1/4”	19
WA 010 HB	10	350	G 3/8”	22
WA 013 HB	13	315	G 1/2”	27
WA 016 HB	16	315	G 5/8"	30
WA 020 HB	20	250	G 3/4”	32
WA 025 HB	25	200	G 1"	41
WA 032 HB	32	160	G 1.1/4”	50
WA 040 HB	40	125	G 1.1/2”	55
WA 050 HB	50	80	G 2"	70

Product versions

WA HB VA	Connector ... HB, VA, Stainless steel

Despite careful checking, we cannot guarantee the accuracy of all information included on this site, and we accept no liability.