WA HL VA

Connector ... HL, VA

Properties

Application	Connection fitting for metal hoses
Connection 1	metric cylindrical outer thread
Sealing form 1	24° inner cone
Standard	DIN 2353 ISO 8434-1
Short code	CEL
Construction	straight
Series	light
Material	Stainless steel



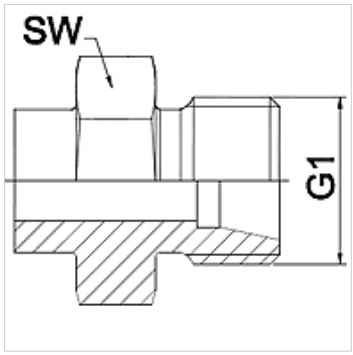

Note

Width across flats values are listed for reference purposes!

Ordering information

Other designs available on request

Item

Identification	DN	PN (bar)	G1	Series	AF (mm)
WA 004 HL VA	4	250	M 12 x 1.5	6 L	14
WA 006 HL VA	6	250	M 14 x 1.5	8 L	17
WA 008 HL VA	8	250	M 16 x 1.5	10 L	17
WA 010 HL VA	10	250	M 18 x 1.5	12 L	19
WA 013 HL VA	13	250	M 22 x 1.5	15 L	22
WA 016 HL VA	16	160	M 26 x 1.5	18 L	27
WA 020 HL VA	20	160	M 30 x 2	22 L	32
WA 025 HL VA	25	100	M 36 x 2	28 L	41
WA 032 HL VA	32	100	M 45 x 2	35 L	46
WA 040 HL VA	40	100	M 52 x 2	42 L	55

Product versions

WA HL	Connector ... HL, steel, Steel (weldable)

Despite careful checking, we cannot guarantee the accuracy of all information included on this site, and we accept no liability.