WA HS

Connector ... HS, steel

Properties

Application	Connection fitting for metal hoses
Connection 1	metric cylindrical outer thread
Sealing form 1	24° inner cone
Standard	DIN 2353 ISO 8434-1
Short code	CES
Construction	straight
Series	heavy
Material	Steel (weldable)



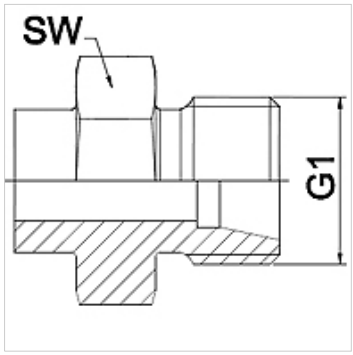

Note

Width across flats values are listed for reference purposes!

Ordering information

Other designs available on request

Item

Identification	DN	PN (bar)	G1	Series	AF (mm)
WA 004 HS	4	630	M 16 x 1.5	8S	17
WA 006 HS	6	630	M 18 x 1.5	10 S	19
WA 008 HS	8	630	M 20 x 1.5	12 S	22
WA 010 HS	10	630	M 22 x 1.5	14 S	24
WA 013 HS	13	400	M 24 x 1.5	16 S	27
WA 016 HS	16	400	M 30 x 2	20 S	32
WA 020 HS	20	400	M 36 x 2	25 S	36
WA 025 HS	25	250	M 42 x 2	30 S	46
WA 032 HS	32	250	M 52 x 2	38 S	55

Product versions

WA HS VA	Connector ... HS, VA, Stainless steel

Despite careful checking, we cannot guarantee the accuracy of all information included on this site, and we accept no liability.