BK-1
Sliding bush BK-1

HANSA FLEX

Properties

Design	Maintenance-free PTFE coated friction bearing
pv	Continuous operation: 1.8 N/mm2 x m/s Short-term operation: 3.6 N/mm2 x m/s
Permissible load	static: 250 N/mm2 low slide speed: 140 N/mm2 Rotation, oscillation: 55 N/mm2
Sliding rate	Dry running = 2 m/s hydrodynamic operation: >2 m/s
Thermal expansion coefficient	parallel to ring surface: 11 x 10-6 K-1 perpendicular to ring surface: 30 x 10-6 K-1
Coefficient of thermal conductivity	> 40 W (m x K)-1
Temp. min.	-200 °C
Temp. max.	270 °C
Surface pressure	250 (≤ N/mm2)
Material	Steel back onto which a porous bronze layer is sintered subsequently a PTFE lead mixture is rolled into the bronze layer
Surface	zinc or copper plated
Application	BK-1 bushes are suitable for transmission, rotational and oscillating movements Rod guide for pneumatic and hydraulic cylinders Attachment lugs of pneumatic and hydraulic cylinders Conveyor-belt systems, textile machinery, automobiles ...
Standard	ISO 3547 DIN 1494

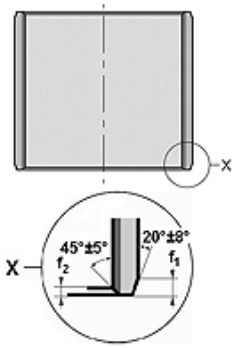

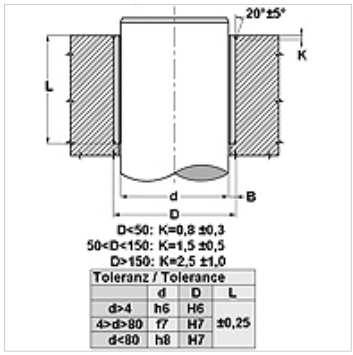

Note

Peak to valley height of shaft to be observed Ra < 0.4 µm.
Hardness of shaft to be observed 350 < HB < 600.

Description

Suitable for dry running and maintenance-free.
Noise and frequency absorption.
hydrodynamic operation possible
High permitted load.
Good chemical resistance.
Good friction characteristics.
No stick-slip.
Broad temperature range.
High slide speed.
No water absorption.
low play during operation.
Extremely space-saving.

Item

Identification	d (mm)	D (mm)	L (mm)	f1 (mm)	f2 (mm)
BK-1- 06 05	6	8,0	5	0,5	0,3
BK-1- 06 10	6	8,0	10	0,5	0,3
BK-1- 08 06	8	10,0	6	0,5	0,3
BK-1- 08 10	8	10,0	10	0,5	0,3
BK-1- 08 12	8	10,0	12	0,5	0,3
BK-1- 10 07	10	12,0	7	0,5	0,3
BK-1- 10 08	10	12,0	8	0,5	0,3
BK-1- 10 10	10	12,0	10	0,5	0,3
BK-1- 10 12	10	12,0	12	0,5	0,3
BK-1- 10 15	10	12,0	15	0,5	0,3
BK-1- 10 20	10	12,0	20	0,5	0,3
BK-1- 12 08	12	14,0	8	0,5	0,3

Despite careful checking, we cannot guarantee the accuracy of all information included on this site, and we accept no liability.

BK-1
Sliding bush BK-1

HANSA-FLEX

Item

Identification	d (mm)	D (mm)	L (mm)	f1 (mm)	f2 (mm)
BK-1- 12 12	12	14,0	12	0,5	0,3
BK-1- 12 15	12	14,0	15	0,5	0,3
BK-1- 12 20	12	14,0	20	0,5	0,3
BK-1- 12 25	12	14,0	25	0,5	0,3
BK-1- 13 10	13	15,0	10	0,5	0,3
BK-1- 14 25	14	16,0	25	0,5	0,3
BK-1- 15 10	15	17,0	10	0,5	0,3
BK-1- 15 12	15	17,0	12	0,5	0,3
BK-1- 15 15	15	17,0	15	0,5	0,3
BK-1- 15 20	15	17,0	20	0,5	0,3
BK-1- 15 25	15	17,0	25	0,5	0,3
BK-1- 16 15	16	18,0	15	0,5	0,3
BK-1- 16 20	16	18,0	20	0,5	0,3
BK-1- 16 25	16	18,0	25	0,5	0,3
BK-1- 17 12	17	19,0	12	0,5	0,3
BK-1- 18 15	18	20,0	15	0,5	0,3
BK-1- 18 20	18	20,0	20	0,5	0,3
BK-1- 18 25	18	20,0	25	0,5	0,3
BK-1- 20 10	20	23,0	10	0,8	0,4
BK-1- 20 20	20	23,0	20	0,8	0,4
BK-1- 20 25	20	23,0	25	0,8	0,4
BK-1- 20 30	20	23,0	30	0,8	0,4
BK-1- 22 20	22	25,0	20	0,8	0,4
BK-1- 22 25	22	25,0	25	0,8	0,4
BK-1- 22 30	22	25,0	30	0,8	0,4
BK-1- 24 15	24	27,0	15	0,8	0,4
BK-1- 24 25	24	27,0	25	0,8	0,4
BK-1- 24 30	24	27,0	30	0,8	0,4
BK-1- 25 12	25	28,0	12	0,8	0,4
BK-1- 25 15	25	28,0	15	0,8	0,4
BK-1- 25 20	25	28,0	20	0,8	0,4
BK-1- 25 25	25	28,0	25	0,8	0,4
BK-1- 25 30	25	28,0	30	0,8	0,4
BK-1- 25 35	25	28,0	35	0,8	0,4
BK-1- 25 40	25	28,0	40	0,8	0,4
BK-1- 25 50	25	28,0	50	0,8	0,4
BK-1- 26 20	26	29,0	20	1,0	0,5
BK-1- 26 30	26	29,0	30	1,0	0,5
BK-1- 28 20	28	32,0	20	1,0	0,5
BK-1- 28 25	28	32,0	25	1,0	0,5
BK-1- 28 30	28	32,0	30	1,0	0,5
BK-1- 28 35	28	32,0	35	1,0	0,5
BK-1- 30 12	30	34,0	12	1,0	0,5
BK-1- 30 15	30	34,0	15	1,0	0,5
BK-1- 30 20	30	34,0	20	1,0	0,5
BK-1- 30 25	30	34,0	25	1,0	0,5
BK-1- 30 30	30	34,0	30	1,0	0,5
BK-1- 30 35	30	34,0	35	1,0	0,5
BK-1- 30 40	30	34,0	40	1,0	0,5
BK-1- 32 20	32	36,0	20	1,0	0,5
BK-1- 32 25	32	36,0	25	1,0	0,5
BK-1- 32 30	32	36,0	30	1,0	0,5
BK-1- 32 40	32	36,0	40	1,0	0,5
BK-1- 35 20	35	39,0	20	1,0	0,5
BK-1- 35 25	35	39,0	25	1,0	0,5
BK-1- 35 30	35	39,0	30	1,0	0,5
BK-1- 35 35	35	39,0	35	1,0	0,5
BK-1- 35 40	35	39,0	40	1,0	0,5
BK-1- 35 50	35	39,0	50	1,0	0,5
BK-1- 38 20	38	42,0	20	1,0	0,5
BK-1- 38 40	38	42,0	40	1,0	0,5
BK-1- 40 12	40	44,0	12	1,0	0,5
BK-1- 40 20	40	44,0	20	1,0	0,5

Despite careful checking, we cannot guarantee the accuracy of all information included on this site, and we accept no liability.

BK-1
Sliding bush BK-1

HANSA-FLEX

Item

Identification	d (mm)	D (mm)	L (mm)	f1 (mm)	f2 (mm)
BK-1- 40 25	40	44,0	25	1,0	0,5
BK-1- 40 30	40	44,0	30	1,0	0,5
BK-1- 40 35	40	44,0	35	1,0	0,5
BK-1- 40 40	40	44,0	40	1,0	0,5
BK-1- 40 50	40	44,0	50	1,0	0,5
BK-1- 45 20	45	50,0	20	1,2	0,6
BK-1- 45 25	45	50,0	25	1,2	0,6
BK-1- 45 30	45	50,0	30	1,2	0,6
BK-1- 45 35	45	50,0	35	1,2	0,6
BK-1- 45 40	45	50,0	40	1,2	0,6
BK-1- 45 45	45	50,0	45	1,2	0,6
BK-1- 45 50	45	50,0	50	1,2	0,6
BK-1- 50 15	50	55,0	15	1,2	0,6
BK-1- 50 20	50	55,0	20	1,2	0,6
BK-1- 50 25	50	55,0	25	1,2	0,6
BK-1- 50 30	50	55,0	30	1,2	0,6
BK-1- 50 35	50	55,0	35	1,2	0,6
BK-1- 50 40	50	55,0	40	1,2	0,6
BK-1- 50 50	50	55,0	50	1,2	0,6
BK-1- 50 60	50	55,0	60	1,2	0,6
BK-1- 55 30	55	60,0	30	1,2	0,6
BK-1- 55 35	55	60,0	35	1,2	0,6
BK-1- 55 40	55	60,0	40	1,2	0,6
BK-1- 55 50	55	60,0	50	1,2	0,6
BK-1- 55 60	55	60,0	60	1,2	0,6
BK-1- 60 30	60	65,0	30	1,2	0,6
BK-1- 60 40	60	65,0	40	1,2	0,6
BK-1- 60 50	60	65,0	50	1,2	0,6
BK-1- 60 60	60	65,0	60	1,2	0,6
BK-1- 60 70	60	65,0	70	1,2	0,6
BK-1- 65 40	65	70,0	40	1,2	0,6
BK-1- 65 50	65	70,0	50	1,2	0,6
BK-1- 65 60	65	70,0	60	1,2	0,6
BK-1- 65 70	65	70,0	70	1,2	0,6
BK-1- 70 30	70	75,0	30	1,2	0,6
BK-1- 70 40	70	75,0	40	1,2	0,6
BK-1- 70 60	70	75,0	60	1,2	0,6
BK-1- 70 70	70	75,0	70	1,2	0,6
BK-1- 75 30	75	80,0	30	1,2	0,6
BK-1- 75 50	75	80,0	50	1,2	0,6
BK-1- 75 60	75	80,0	60	1,2	0,6
BK-1- 80 40	80	85,0	40	1,2	0,6
BK-1- 80 60	80	85,0	60	1,2	0,6
BK-1- 80 80	80	85,0	80	1,2	0,6
BK-1- 80 100	80	85,0	100	1,2	0,6
BK-1- 85 40	85	90,0	40	1,2	0,6
BK-1- 90 40	90	95,0	40	1,2	0,6
BK-1- 90 60	90	95,0	60	1,2	0,6
BK-1- 90 100	90	95,0	100	1,2	0,6
BK-1- 100 50	100	105,0	50	1,2	0,6
BK-1- 100 60	100	105,0	60	1,2	0,6
BK-1- 100 95	100	105,0	95	1,2	0,6
BK-1- 110 50	110	115,0	50	1,2	0,6
BK-1- 110 60	110	115,0	60	1,2	0,6
BK-1- 120 60	120	125,0	60	1,2	0,6
BK-1- 120 100	120	125,0	100	1,2	0,6
BK-1- 125 100	125	130,0	100	1,2	0,6
BK-1- 140 80	140	145,0	80	1,2	0,6
BK-1- 160 80	160	165,0	80	1,2	0,6
BK-1- 160 100	160	165,0	100	1,2	0,6

Despite careful checking, we cannot guarantee the accuracy of all information included on this site, and we accept no liability.