CH
Chevron ring CH

HANSA-FLEX

Properties

Design	Chevron ring
Operating pressure	up to 400 bar
Sliding speed max.	0,5 m/s
Temp. min.	-30 °C
Temp. max.	110 °C
Media	Mineral oils Water emulsions
Installation	in open grooves
Material	(1) Chevron ring: 1 x NBR, + 2 x fabric-reinforced NBR (2) Support ring: acetal resin / PTBR (3) Thrust ring: laminated fabric-reinforced NBR
Application	Hydraulics



Toleranz / Tolerance		
d	D	L
H8/f7	H9	d <200 : Lj +1,0/+1,5 d >200 : Lj +1,5/+2,0

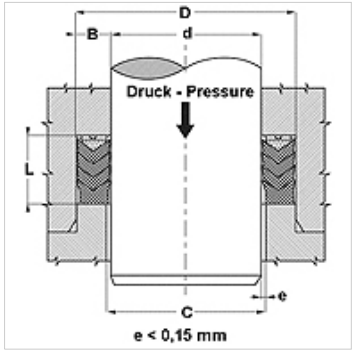

Description

High temperature resistance.
for difficult working conditions such as hydraulic shocks,
Strong vibrations or poor surfaces.

Ordering information

For special operating conditions (fluid, temperature, pressure ...) please contact us.
Alternative material possible: FPM.

Item

Identification	d (mm)	D (mm)	L (mm)
CH-098 047-B	12,00	25,00	14,32
CH-100 050	12,70	25,40	19,05
CH-106 055-B	14,00	27,00	14,32
CH-112 071	18,25	28,57	16,05
CH-118 078	20,00	30,00	21,50
CH-125 078	20,00	32,00	18,20
CH-125 086	22,00	32,00	18,13
CH-137 098	25,00	35,00	17,30
CH-141 078	20,00	36,00	24,00
CH-157 098	25,00	40,00	19,84
CH-157 110	28,00	40,00	17,00
CH-157 118	30,00	40,00	21,80
CH-162 112	28,57	41,27	19,84
CH-165 118	30,00	42,00	20,00
CH-165 125	32,00	42,00	17,30
CH-175 125	31,75	44,45	19,05
CH-177 137	35,00	45,00	21,78
CH-187 137	34,92	47,62	20,64
CH-188 125-B	32,00	48,00	17,63
CH-196 118	30,00	50,00	29,37
CH-196 137	35,00	50,00	22,50
CH-196 157	40,00	50,00	17,30
CH-200 137	34,92	50,80	24,21
CH-200 150	38,10	50,80	19,45
CH-204 141-B	36,00	52,00	17,60
CH-212 150	38,10	53,97	25,27
CH-216 153	39,00	55,00	25,40
CH-216 157	40,00	55,00	22,62
CH-216 157-1	40,00	55,00	26,19
CH-220 157-B	40,00	56,00	17,63
CH-225 150	38,10	57,15	28,70
CH-225 175	44,45	57,15	21,83
CH-236 157	40,00	60,00	30,00
CH-236 177	45,00	60,00	22,22
CH-236 188	48,00	60,00	25,00

Despite careful checking, we cannot guarantee the accuracy of all information included on this site, and we accept no liability.

Item

Identification	d (mm)	D (mm)	L (mm)
CH-237 175	44,45	60,32	27,80
CH-250 200	50,80	63,50	19,84
CH-255 177	45,00	65,00	28,00
CH-262 200	50,80	66,67	23,00
CH-262 200-1	50,80	66,67	25,27
CH-263 216	55,00	67,00	25,00
CH-275 196	50,00	70,00	30,00
CH-275 196-B	50,00	70,00	21,94
CH-275 200	50,80	69,85	33,50
CH-275 216	55,00	70,00	26,50
CH-275 225	57,15	69,85	19,05
CH-279 220	56,00	71,00	17,20
CH-295 216	55,00	75,00	30,00
CH-295 216-1	55,00	75,00	38,50
CH-299 220-B	56,00	76,00	21,95
CH-299 236	60,00	76,00	29,00
CH-300 225	57,15	76,20	32,54
CH-314 236	60,00	80,00	32,15
CH-314 250	63,50	80,00	28,00
CH-326 248-B	63,00	83,00	21,94
CH-334 255	65,00	85,00	29,00
CH-334 261	66,30	85,00	24,13
CH-334 275	70,00	85,00	28,00
CH-350 275	69,85	88,90	25,40
CH-350 300	76,20	88,90	16,27
CH-354 255	65,00	90,00	30,00
CH-354 275	70,00	90,00	30,00
CH-354 295	75,00	90,00	22,50
CH-374 295	75,00	95,00	30,00
CH-374 314	80,00	95,00	17,50
CH-393 295	75,00	100,00	30,00
CH-393 314	80,00	100,00	30,00
CH-400 325	82,55	101,60	28,97
CH-400 350	88,90	101,60	17,00
CH-413 354	90,00	105,00	31,75
CH-425 350-1	88,90	107,95	33,33
CH-433 354	90,00	110,00	26,88
CH-433 354-1	90,00	110,00	25,00
CH-433 374	95,00	110,00	24,00
CH-450 393	100,00	114,30	20,64
CH-452 354-B	90,00	115,00	27,41
CH-452 393	100,00	115,00	25,30
CH-472 393	100,00	120,00	28,00
CH-492 393	100,00	125,00	36,90
CH-492 393-B	100,00	125,00	27,40
CH-492 413	105,00	125,00	29,76
CH-500 450	114,30	127,00	18,41
CH-511 409	104,00	130,00	37,00
CH-519 433	110,00	132,00	36,50
CH-551 433	110,00	140,00	41,20
CH-551 452	115,00	140,00	37,12
CH-551 472	120,00	140,00	30,00
CH-570 492	125,00	145,00	29,62
CH-590 492-B	125,00	150,00	27,40
CH-590 511	130,00	150,00	29,76
CH-610 492	125,00	155,00	34,50
CH-610 511	130,00	155,00	40,00
CH-610 531	135,00	155,00	30,55
CH-629 551	140,00	160,00	28,50
CH-649 551	140,00	165,00	41,95
CH-669 551-B	140,00	170,00	32,97
CH-669 570	145,00	170,00	38,10
CH-669 590	150,00	170,00	30,56

Despite careful checking, we cannot guarantee the accuracy of all information included on this site, and we accept no liability.

Item

Identification	d (mm)	D (mm)	L (mm)
CH-700 600	152,40	177,80	33,34
CH-708 590	150,00	180,00	40,00
CH-708 629	160,00	180,00	30,00
CH-767 669	170,00	195,00	37,50
CH-787 669	170,00	200,00	50,00
CH-787 669-1	170,00	200,00	43,00
CH-866 787	200,00	220,00	30,00
CH-944 826	210,00	240,00	34,50
CH-944 826-1	210,00	240,00	42,10
CH-984 866	220,00	250,00	52,00
CH-125 91141	290,00	320,00	50,80
CH-125 91181	300,00	320,00	32,00
CH-153 51377	350,00	390,00	61,60
CH-196 81811	460,00	500,00	53,40

Product versions

CH NEI	Chevron ring CH-NEI, (1) Chevron ring: 1 x NBR, + 2 x fabric-reinforced NBR

Despite careful checking, we cannot guarantee the accuracy of all information included on this site, and we accept no liability.