CR (1,0 mm)

Copper sealing ring, 1 mm thick

HANSA-FLEX

Properties

Design	Sealing ring
Temp. min.	-50 °C
Temp. max.	300 °C
Material	Copper



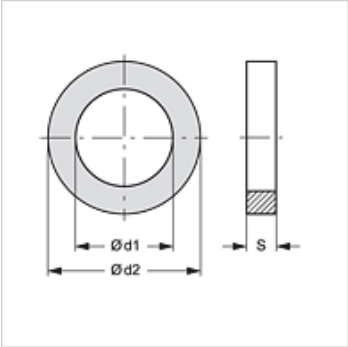

Item

Identification	d1 (mm)	d2 (mm)	S (mm)
CR 4-8-1	4,00	8,00	1,00
CR 5-7.5-1	5,00	7,50	1,00
CR 5-8-1	5,00	8,00	1,00
CR 5-9-1	5,00	9,00	1,00
CR 5-10-1	5,00	10,00	1,00
CR 5.5-8-1	5,50	8,00	1,00
CR 6-10-1	6,00	10,00	1,00
CR 6-12-1	6,00	12,00	1,00
CR 6.5-9.5-1	6,50	9,50	1,00
CR 6.5-11-1	6,50	11,00	1,00
CR 8-11.5-1	8,00	11,50	1,00
CR 8-12-1	8,00	12,00	1,00
CR 8-13-1	8,00	13,00	1,00
CR 8-14-1	8,00	14,00	1,00
CR 8-15-1	8,00	15,00	1,00
CR 9-13-1	9,00	13,00	1,00
CR 9-14-1	9,00	14,00	1,00
CR 10-13-1	10,00	13,00	1,00
CR 10-13.5-1	10,00	13,50	1,00
CR 10-14-1	10,00	14,00	1,00
CR 10-15-1	10,00	15,00	1,00
CR 10-16-1	10,00	16,00	1,00
CR 10-17-1	10,00	17,00	1,00
CR 10-18-1	10,00	18,00	1,00
CR 10-20-1	10,00	20,00	1,00
CR 11-17-1	11,00	17,00	1,00
CR 11-20-1	11,00	20,00	1,00
CR 12-15.5-1	12,00	15,50	1,00
CR 12-16-1	12,00	16,00	1,00
CR 12-17-1	12,00	17,00	1,00
CR 12-18-1	12,00	18,00	1,00
CR 12-20-1	12,00	20,00	1,00
CR 13-17-1	13,00	17,00	1,00
CR 13-18-1	13,00	18,00	1,00
CR 13-19-1	13,00	19,00	1,00
CR 13-20-1	13,00	20,00	1,00
CR 14-18-1	14,00	18,00	1,00
CR 14-20-1	14,00	20,00	1,00
CR 14-24-1	14,00	24,00	1,00
CR 15-20-1	15,00	20,00	1,00
CR 16.5-24-1	16,50	24,00	1,00
CR 16-20-1	16,00	20,00	1,00
CR 16-22-1	16,00	22,00	1,00
CR 17-21-1	17,00	21,00	1,00
CR 17-22-1	17,00	22,00	1,00
CR 17-23-1	17,00	23,00	1,00
CR 18-22-1	18,00	22,00	1,00
CR 18-24-1	18,00	24,00	1,00
CR 20-24-1	20,00	24,00	1,00
CR 20-26-1	20,00	26,00	1,00

Despite careful checking, we cannot guarantee the accuracy of all information included on this site, and we accept no liability.

CR (1,0 mm)

Copper sealing ring, 1 mm thick

HANSA-FLEX

Item

Identification	d1 (mm)	d2 (mm)	S (mm)
CR 21-26-1	21,00	26,00	1,00
CR 21-27-1	21,00	27,00	1,00
CR 21-28-1	21,00	28,00	1,00
CR 21-30-1	21,00	30,00	1,00
CR 22-27-1	22,00	27,00	1,00
CR 22-28-1	22,00	28,00	1,00
CR 22-29-1	22,00	29,00	1,00
CR 24-30-1	24,00	30,00	1,00
CR 26-30-1	26,00	30,00	1,00
CR 30-36-1	30,00	36,00	1,00

Despite careful checking, we cannot guarantee the accuracy of all information included on this site, and we accept no liability.