CR (2,5 - 3,5 mm)

Copper sealing ring, 2.5 - 3.5 mm thick

HANSA-FLEX

Properties

Design	Sealing ring
Temp. min.	-50 °C
Temp. max.	300 °C
Material	Copper



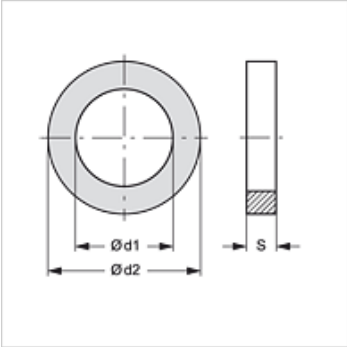

Item

Identification	d1 (mm)	d2 (mm)	S (mm)
CR 6.2-17.5-2.5	6,20	17,50	2,50
CR 11-24-2.5	11,00	24,00	2,50
CR 52-60-2.5	52,00	60,00	2,50
CR 60-68-2.5	60,00	68,00	2,50
CR 64-72-2.5	64,00	72,00	2,50
CR 65-74-2.5	65,00	74,00	2,50
CR 75-84-2.5	75,00	84,00	2,50
CR 90-100-2.5	90,00	100,00	2,50
CR 21-27-3	21,00	27,00	3,00
CR 35-42-3.5	35,00	42,00	3,50

Despite careful checking, we cannot guarantee the accuracy of all information included on this site, and we accept no liability.