D11W

Piston packing set for split pistons D11W

Properties

Operating pressure	up to 500 bar
Sliding speed max.	0,5 m/s
Temp. min.	-30 °C
Temp. max.	110 °C
Media	Mineral oils Water emulsions
Installation	on multi-part pistons
Material	(1) Seal: NBR with fabric reinforcement on both sides (2) Guide ring: acetal resin (3) Support ring: acetal resin / PTBR
Application	Hydraulics



Toleranz / Tolerance					
D	d	L	G	M	P
H11	+0,10 0	+0,25 0	+0,10 0	±0,05	± 0,10

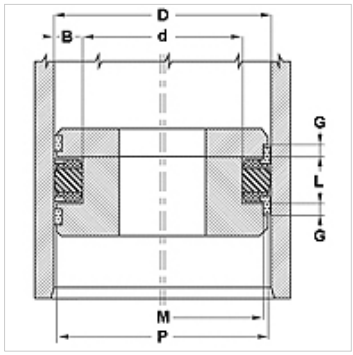

Description

Extremely good sealing effect at low pressure.
Low spatial requirement.
Simple solution.

Ordering information

For special operating conditions (fluid, temperature, pressure ...) please contact us.
Alternative material possible: FPM.

Item

Identification	D (mm)	d (mm)	L (mm)	G (mm)	M (mm)	P (mm)
D11W 980 47	25,00	12,00	12,40	6,35	21,45	23,73
D11W 150 100	38,10	25,40	16,27	6,35	34,54	37,05
D11W 200 137	50,80	34,92	19,45	6,35	46,22	49,50
D11W 248 185	63,00	47,00	19,40	6,35	58,40	61,65
D11W 250 187	63,50	47,62	19,45	6,35	58,90	62,13
D11W 300 225	76,20	57,15	24,21	6,35	70,40	74,55
D11W 325 250	82,55	63,50	24,21	6,35	76,73	80,90
D11W 354 275-1	90,00	70,00	25,40	6,35	84,15	88,30
D11W 400 325	101,60	82,55	24,21	6,35	95,76	99,90
D11W 413 314	105,00	80,00	22,40	6,35	98,10	103,00
D11W 425 350	107,95	88,90	24,21	6,35	102,08	106,23
D11W 433 334	110,00	85,00	25,40	6,35	103,10	108,00
D11W 433 354	110,00	90,00	25,40	6,35	104,15	108,30
D11W 452 354	115,00	90,00	22,40	6,35	108,10	113,00
D11W 492 393	125,00	100,00	25,40	6,35	118,10	123,00
D11W 492 413	125,00	105,00	25,40	6,35	119,15	123,30
D11W 500 400	127,00	101,60	32,15	6,35	120,09	124,98
D11W 550 450	139,70	114,30	32,15	6,35	132,77	137,65
D11W 551 472	140,00	120,00	25,40	6,35	134,10	138,30
D11W 629 511	160,00	130,00	25,40	6,35	153,00	157,90
D11W 650 550	165,10	139,70	32,15	6,35	158,12	163,01
D11W 708 590	180,00	150,00	35,40	6,35	172,95	177,87
D11W 748 629	190,00	160,00	35,40	6,35	182,93	187,87
D11W 787 669	200,00	170,00	35,40	6,35	192,96	197,84

Despite careful checking, we cannot guarantee the accuracy of all information included on this site, and we accept no liability.