DDE
Piston seal, DDE

Properties

Design	Piston U-ring
Operating pressure	up to 80 bar
Sliding speed max.	0,5 m/s
Design	Inches
Temp. min.	-30 °C
Temp. max.	100 °C
Media	Mineral oils Water-air
Installation	on one-piece pistons A on multi-part pistons B
Material	NBR 75° Shore A
Application	Hydraulics + pneumatics



Toleranz / Tolerance		
D	d	L
H9 / e8	h9	+0,50 0

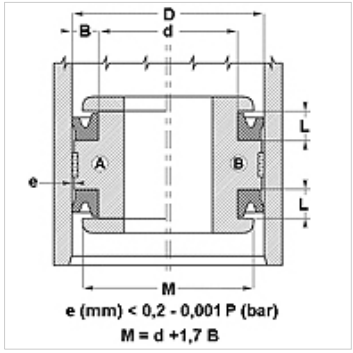

Description

Low-friction seal.
Simple solution.

Ordering information

We are able to produce seals with diameters of 20 to 510 mm with short lead times.

Item

Identification	D (mm)	d (mm)	L (mm)	H (mm)
DDE 50	13,00	6,70	6,30	4,76
DDE 62	16,00	8,10	7,00	5,55
DDE 75	19,05	12,70	5,00	3,17
DDE 100	25,40	16,50	8,00	6,35
DDE 106	27,00	17,50	8,00	6,35
DDE 112	29,00	19,05	8,00	6,35
DDE 125	32,00	19,30	8,00	6,35
DDE 137	35,00	22,30	8,00	6,35
DDE 143	37,00	26,00	8,00	6,35
DDE 150	38,00	30,00	8,00	6,35
DDE 150100	38,10	25,40	9,52	7,92
DDE 156	40,00	27,30	8,00	6,35
DDE 162	42,00	30,90	8,00	6,35
DDE 175112	44,45	28,57	11,10	9,52
DDE 175	45,00	35,50	8,50	7,00
DDE 200	51,00	41,50	9,00	7,14
DDE 212150	53,97	38,10	11,10	9,52
DDE 250	64,00	46,30	10,50	8,85
DDE 300	76,00	57,90	10,50	8,73
DDE 300225	76,20	57,15	14,30	12,70
DDE 312	80,00	67,30	8,00	6,35
DDE 387	99,00	86,30	11,00	9,52
DDE 400	102,00	89,30	11,00	9,52
DDE 437	111,00	94,70	9,50	7,93

Despite careful checking, we cannot guarantee the accuracy of all information included on this site, and we accept no liability.