DDEM
Piston seal DDEM

Properties

Design	Piston U-ring
Operating pressure	up to 80 bar
Sliding speed max.	0,5 m/s
Design	Metric
Temp. min.	-30 °C
Temp. max.	100 °C
Media	Mineral oils Water-air
Installation	on one-piece pistons A on multi-part pistons B
Material	NBR 75° Shore A
Application	Hydraulics + pneumatics

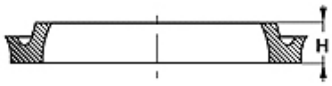

Toleranz / Tolerance		
D	d	L
H9 / e8	h9	+0,50 0

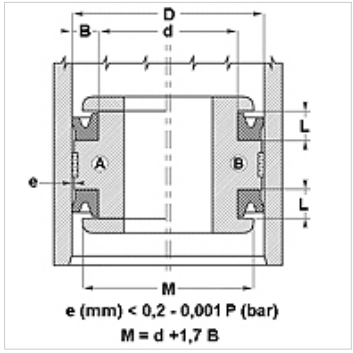

Description

Low-friction seal.
Simple solution.

Ordering information

We are able to produce seals with diameters of 20 to 510 mm with short lead times.

Item

Identification	D (mm)	d (mm)	L (mm)	H (mm)
DDEM 12 06	12,0	6,00	4,5	4,00
DDEM 16 10	16,0	10,00	4,5	4,00
DDEM 20 12	20,0	12,00	6,0	5,50
DDEM 25 17	25,0	17,00	6,0	5,50
DDEM 32 24	32,0	24,00	6,0	5,50
DDEM 40 30	40,0	30,00	7,5	7,00
DDEM 50 40	50,0	40,00	7,5	7,00
DDEM 55 45	55,0	45,00	7,5	7,00
DDEM 60 50	60,0	50,00	7,5	7,00
DDEM 63 53	63,0	53,00	7,5	7,00
DDEM 65 55	65,0	55,00	7,5	7,00
DDEM 70 58	70,0	58,00	9,5	8,50
DDEM 75 63	75,0	63,00	9,5	8,50
DDEM 80 68	80,0	68,00	9,5	8,50
DDEM 85 73	85,0	73,00	9,5	8,50
DDEM 90 78	90,0	78,00	9,5	8,50
DDEM 100 088	100,0	88,00	9,5	8,50
DDEM 105 093	105,0	93,00	9,5	8,50
DDEM 110 098	110,0	98,00	9,5	8,50
DDEM 120 105	120,0	105,00	11,0	10,00
DDEM 125 110	125,0	110,00	11,0	10,00
DDEM 140 125	140,0	125,00	11,0	10,00
DDEM 150 135	150,0	135,00	11,0	10,00
DDEM 160 145	160,0	145,00	11,0	10,00
DDEM 180 160	180,0	160,00	15,0	14,00
DDEM 200 180	200,0	180,00	15,0	14,00

Despite careful checking, we cannot guarantee the accuracy of all information included on this site, and we accept no liability.