DDEM P
Piston seal, DDEM-P

Properties

Design	Piston U-ring
Operating pressure	up to 16 bar
Sliding speed max.	1,0 m/s
Design	Metric
Temp. min.	-30 °C
Temp. max.	80 °C
Media	Air
Installation	on one-piece pistons A on multi-part pistons B
Material	PUR 90° Shore A
Application	Hydraulics + pneumatics

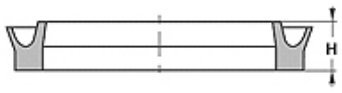

Toleranz / Tolerance		
D	d	L
H9 / e8	h9	+0,50 0

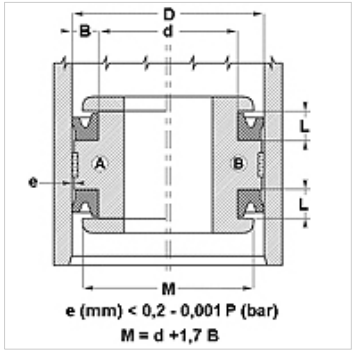

Description

Low-friction seal.
Simple solution.

Ordering information

We are able to produce seals with diameters of 20 to 510 mm with short lead times.

Item

Identification	D (mm)	d (mm)	L (mm)
DDEM 20 14-P	20	14	4,5
DDEM 25 17-P	25	17	5,5
DDEM 32 24-P	32	24	6,0
DDEM 40 30-P	40	30	7,5
DDEM 50 40-P	50	40	7,5
DDEM 55 45-P	55	45	7,5
DDEM 60 50-P	60	50	7,5
DDEM 63 53-P	63	53	7,5
DDEM 65 55-P	65	55	7,5
DDEM 70 58-P	70	58	9,5
DDEM 75 63-P	75	63	9,5
DDEM 80 68-P	80	68	9,5
DDEM 85 73-P	85	73	9,5
DDEM 90 78-P	90	78	9,5
DDEM 000 88-P	100	88	9,5
DDEM 100 95-P	110	95	11,0
DDEM 201 05-P	120	105	11,0
DDEM 25 110-P	125	110	11,0
DDEM 60 145-P	160	145	11,0
DDEM 80 160-P	180	160	15,0
DDEM 00 180-P	200	180	15,0

Despite careful checking, we cannot guarantee the accuracy of all information included on this site, and we accept no liability.