DS
Piston seal DS

Properties

Design	U-ring packing set
Operating pressure	up to 250 bar
Sliding speed max.	0,5 m/s
Temp. min.	-40 °C
Temp. max.	110 °C
Media	Mineral oils Water emulsions
Installation	on multi-part pistons
Material	(1) Support ring: NBR (2) Seal: fabric-reinforced NBR
Application	Hydraulics

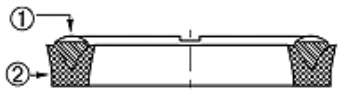

Toleranz / Tolerance			
D	d	M	L
H9 / e8	± 0,06	± 0,10	± 0,12

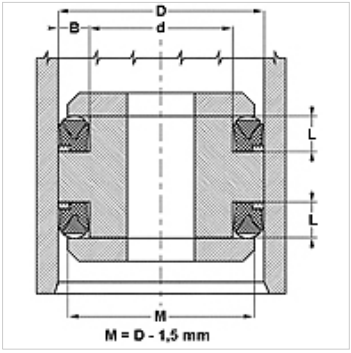

Description

Low spatial requirement.
High resistance to extrusion.

Ordering information

For special operating conditions (fluid, temperature, pressure ...) please contact us.
Alternative material possible: FPM.

Item

Identification	D (mm)	d (mm)	L (mm)
DS 940 47	24	12	7,5
DS 980 51	25	13	8,0
DS 157 098	40	25	10,0
DS 196 137	50	35	10,0
DS 216 1571	55	40	9,5
DS 216 157	55	40	12,0
DS 255 177	65	45	13,5
DS 275 196	70	50	13,5
DS 314 236	80	60	13,5
DS 354 275	90	70	13,5
DS 374 295	95	75	13,5
DS 590 492	150	125	14,0
DS 787 669	200	170	19,8
DS 886 767	225	195	19,8
DS 984 866	250	220	19,8
DS 118 11062	300	270	19,8

Despite careful checking, we cannot guarantee the accuracy of all information included on this site, and we accept no liability.