GA FPM
Wiper GA-FPM

Properties

Design	Wipers
Sliding speed max.	0,5 m/s
Temp. min.	-20 °C
Temp. max.	200 °C
Media	Mineral oils Water emulsions
Installation	is pressed into an open groove
Material	(1) Sleeve: Steel Wiper: FPM
Application	Hydraulics

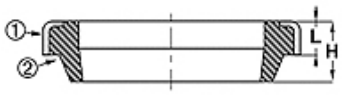

Toleranz / Tolerance		
d	D	L
h11	H8	+0,20 0

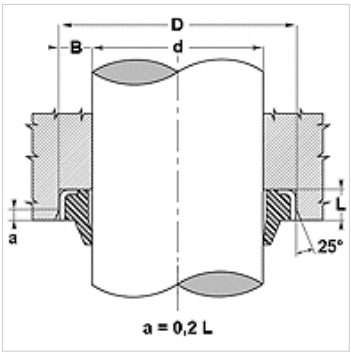

Description

Low spatial requirement.
No penetration of dirt via the outer metal ring.
Simple solution.

Ordering information

For special operating conditions (fluid, temperature, pressure ...) please contact us.

Item

Identification	d (mm)	D (mm)	L (mm)	H (mm)
GA 16 22-3 FPM	16	22	3,0	4
GA 25 35-7 FPM	25	35	7,0	10
GA 30 40-7 FPM	30	40	7,0	10
GA 32 45-4 FPM	32	45	4,0	8
GA 45 55-7 FPM	45	55	7,0	10
GA 45 60-7 FPM	45	60	7,0	10
GA 50 56-5 FPM	50	56	5,0	8
GA 60 70-7 FPM	60	70	7,0	10
GA 63 75-7 FPM	63	75	7,0	10
GA 70 80-7 FPM	70	80	7,0	10

Despite careful checking, we cannot guarantee the accuracy of all information included on this site, and we accept no liability.