GPS
Piston packing set, GPS

Properties

Design	Piston packing set
Operating pressure	up to 400 bar
Sliding speed max.	0,5 m/s
Temp. min.	-30 °C
Temp. max.	80 °C
Media	Mineral oils
Installation	on one-piece pistons A on multi-part pistons B
Material	(1) Dynamic seal: PUR (2) Static seal: NBR
Application	Hydraulics

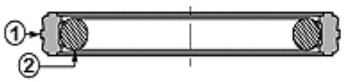

Toleranz / Tolerance		
D	d	L
H9	+0,1 0	+0,2 0

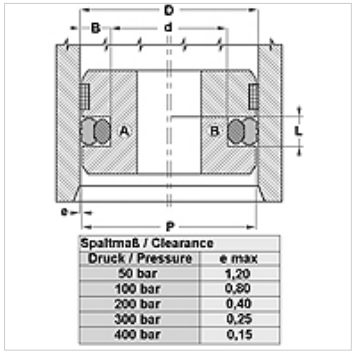

Spaltmaß / Clearance	
Druck / Pressure	e max
50 bar	1,20
100 bar	0,80
200 bar	0,40
300 bar	0,25
400 bar	0,15

Description

Easy assembly.
Low spatial requirement.
Extremely good sealing effect.
High abrasion resistance.

Ordering information

We are able to produce seals with diameters of 20 to 510 mm with short lead times.

Item

Identification	D (mm)	d (mm)	L (mm)	Standard grooves
GPS 25	25	14,0	4,2	ISO 5597
GPS 25-1	25	17,5	3,2	ISO 5597
GPS 30	30	22,5	3,2	ISO 5597
GPS 32	32	21,0	4,2	ISO 5597
GPS 32-1	32	24,5	3,2	ISO 5597
GPS 35	35	27,5	3,2	-
GPS 40	40	24,5	6,3	-
GPS 40-1	40	29,0	4,2	ISO 5597
GPS 40-2	40	32,5	3,2	-
GPS 45	45	29,5	6,3	-
GPS 45-1	45	34,0	4,2	-
GPS 49	49	38,0	4,2	-
GPS 50	50	34,5	6,3	ISO 5597
GPS 50-1	50	39,0	4,2	ISO 5597
GPS 55	55	39,5	6,3	-
GPS 55-1	55	44,0	4,2	-
GPS 60	60	44,5	6,3	-
GPS 60-1	60	49,0	4,2	-
GPS 63	63	47,5	6,3	ISO 5597
GPS 63-1	63	52,0	4,2	ISO 5597
GPS 65	65	49,5	6,3	-
GPS 65-1	65	54,0	4,2	-
GPS 70	70	54,5	6,3	-
GPS 70-1	70	59,0	4,2	-
GPS 75	75	59,5	6,3	-
GPS 75-1	75	64,0	4,2	-
GPS 80	80	64,5	6,3	-
GPS 80-1	80	69,0	4,2	-
GPS 85	85	69,5	6,3	-
GPS 90	90	74,5	6,3	-
GPS 100	100	84,5	6,3	ISO 5597
GPS 105	105	89,5	6,3	-
GPS 110	110	94,5	6,3	-
GPS 120	120	104,5	6,3	-
GPS 125	125	109,5	6,3	ISO 5597
GPS 130	130	114,5	6,3	-
GPS 140	140	119,0	8,1	-

Despite careful checking, we cannot guarantee the accuracy of all information included on this site, and we accept no liability.

GPS
Piston packing set, GPS

HANSA-FLEX

Item				
Identification	D (mm)	d (mm)	L (mm)	Standard grooves
GPS 150	150	129,0	8,1	-
GPS 160	160	139,0	8,1	ISO 5597
GPS 170	170	149,0	8,1	-
GPS 180	180	159,0	8,1	-
GPS 200	200	179,0	8,1	ISO 5597

Despite careful checking, we cannot guarantee the accuracy of all information included on this site, and we accept no liability.