GPS LP

Piston packing set, GPS-LP

Properties

Operating pressure	up to 400 bar
Sliding speed max.	0,5 m/s
Temp. min.	-30 °C
Temp. max.	80 °C
Media	Mineral oils
Installation	on one-piece pistons A on multi-part pistons B
Material	(1) Dynamic seal: PUR (2) Static seal: NBR



Toleranz / Tolerance		
D	d	L
H9	+0,1 0	+0,2 0

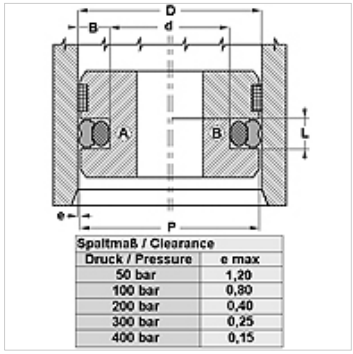

Spaltmaß / Clearance	
Druck / Pressure	e max
50 bar	1,20
100 bar	0,80
200 bar	0,40
300 bar	0,25
400 bar	0,15

Description

Easy assembly.
Low spatial requirement.
High abrasion resistance.
Extremely good sealing effect.

Ordering information

We are able to produce seals with diameters of 20 to 510 mm with short lead times.

Item

Identification	D (mm)	d (mm)	L (mm)
GPS 35-1-LP	35,00	24,00	4,2
GPS 38-LP	38,00	30,50	3,2
GPS 130-1-LP	130,00	109,00	8,1

Despite careful checking, we cannot guarantee the accuracy of all information included on this site, and we accept no liability.