IBF
Rod seal IBF

Properties

Design	Rod U-ring
Operating pressure	up to 400 bar
Sliding speed max.	0,5 m/s
Temp. min.	-30 °C
Temp. max.	80 °C
Media	Mineral oils
Installation	in closed grooves
Application	Hydraulics
Material	(2) Seal: PUR Support ring: POM

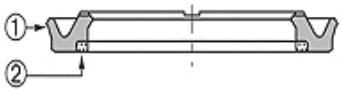

Toleranz / Tolerance		
d	D	L
H8 / f7	H9	+0,20 0

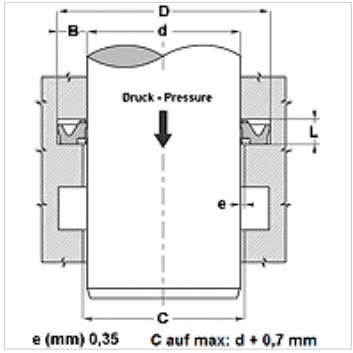

Description

Low spatial requirement.
High abrasion resistance.
As buffer seal.

Item

Identification	D (mm)	D (mm)	d (mm)	L (mm)
IBF 40	55,5	-	40	6,3
IBF 50	65,5	-	50	6,3
IBF 55	70,5	-	55	6,3
IBF 60	75,5	-	60	6,3
IBF 65	80,5	-	65	6,3
IBF 70	85,5	-	70	6,3
IBF 75	90,5	-	75	6,3
IBF 80	95,5	-	80	6,3
IBF 85	100,5	-	85	6,3
IBF 95	110,5	-	95	6,3
IBF 100	115,5	-	100	6,3
IBF 140	-	155	140	6,3

Despite careful checking, we cannot guarantee the accuracy of all information included on this site, and we accept no liability.