NPSL-P

Combination element NPSL-P

Properties

Design	Rod wiper seal
Operating pressure	up to 10 bar
Sliding speed max.	1,0 m/s
Temp. min.	-30 °C
Temp. max.	90 °C
Media	Mineral oils Water-air
Installation	in open grooves B
Material	Polyurethane 93° Shore A
Application	Pneumatics



Toleranz / Tolerance				
d	D	M	A	E
H8 / f8	H10	± 0,10	+0,20 0	+0,25 0

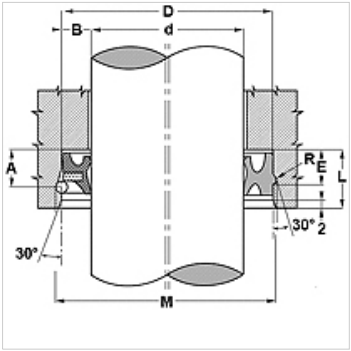

Description

Low-friction seal.

Combination element, seal/wiper.

Item

Identification	d (mm)	D (mm)	h (mm)	H (mm)	L (mm)	M (mm)	E (mm)	R (mm)
NPSL-P 12	12	22	7,0	10,4	13	24,20	8,80	1,10
NPSL-P 16	16	26	7,0	10,4	13	28,20	8,80	1,10
NPSL-P 18	18	28	7,0	10,4	13	30,20	8,80	1,10
NPSL-P 20	20	30	7,0	10,4	13	32,20	8,80	1,40
NPSL-P 22	22	32	7,3	10,4	14	34,80	9,40	1,40
NPSL-P 25	25	35	7,3	10,4	14	37,80	9,40	1,40
NPSL-P 30	30	40	7,3	10,4	14	42,80	9,40	1,40
NPSL-P 32	32	42	7,3	10,4	14	44,80	9,40	1,40
NPSL-P 40	40	50	7,3	10,4	14	52,80	9,40	1,40
NPSL-P 45	45	55	7,7	10,4	15	58,60	10,40	1,80

Despite careful checking, we cannot guarantee the accuracy of all information included on this site, and we accept no liability.